KITSAP COUNTY PARKS DEPARTMENT

POINT NO POINT PARK RESTROOM
FORMAL BID 2016-135

KITSAP COUNTY, WASHINGTON

CONTRACT PROVISIONS

KITSAP COUNTY PARKS DEPARTMENT
614 DIVISION STREET MS-1
PORT ORCHARD, WASHINGTON 98366-4699
360.337.5350

THIS PAGE INTENTIONALLY LEFT BLANK

KITSAP COUNTY DEPARTMENT OF PUBLIC WORKS

POINT NO POINT PARK RESTROOM

The Specifications and Plans were prepared under the supervision and direction of the undersigned whose seal, as professional engineer and licensed to practice as such, is affixed below.

04/11/2016

David L. Dinkuhn, P.E.
Senior Engineer

Parametrix
Firm

THIS PAGE INTENTIONALLY LEFT BLANK

TABLE OF CONTENTS

ATTACHMENTS

INVITATION TO BID

KITSAP COUNTY PARKS DEPARTMENT

POINT NO POINT PARK RESTROOM
2016-135

BID OPENING: DATE: **May 10, 2016** TIME: **3:00 PM**

Sealed bids for the project designated above will be received by the Kitsap County Purchasing Office before the time and date indicated above, at which time they will be opened and publicly read aloud. Bids will be received at the Kitsap County Purchasing Office, 4th Floor Administration Building, 619 Division Street, Port Orchard, Washington. The mailing address for the Kitsap County Purchasing Office is 614 Division Street, MS-07, Port Orchard, Washington 98366. Bids will be opened in the Port Madison Conference Room, 4th Floor Administration Building, 619 Division Street, Port Orchard, Washington. Instructions for the delivery of bids are contained in the Special Provisions for this project. Prospective bidders are hereby notified that they are solely responsible for ensuring timely delivery of their bid to the place of bid opening.

All bid proposals shall be accompanied by a bid proposal surety bond made payable to Kitsap County Parks Department in an amount equal to five percent (5%) of the amount of such bid proposal. Should the successful Bidder fail to enter into such contract and furnish satisfactory performance and payment bonds within the time stated in the Special Provisions, the bid proposal bond shall be forfeited to Kitsap County.

Each proposal or bid shall be completely sealed in a separate envelope, properly addressed as stated above, with the name and address of the bidder and the name of the project plainly written on the outside of the envelope. A complete bid proposal shall include the following:

(1) Proposal Form
(2) Bid Bond
(3) Bidder Responsibility Statement
(4) Non-Collusion Declaration

All of the above items must be complete in all respects, including signatures (notarized where required). Bidder shall acknowledge receipt of all addendums in the spaces provided. The successful bidder will be required to submit a photocopy of their current Washington State Contractor's Registration. Failure to include all items may be cause for the bid to be considered irregular and thereby rejected.

Bids or proposals received after the time set for the opening of bids will not be considered. Bidders are notified that all bids are likely to be rejected if the lowest responsible bid received exceeds the Engineer's estimate by an unreasonable amount.

Kitsap County reserves the right to award the bid in a manner and on a basis which will best serve the County, taking into consideration the Bidder Responsibility Statement

included with the bids and the requirements of the APWA/WSDOT Standard Specifications and the Contract Provisions.

The award of the contract, if made, shall be made to the responsible Bidder submitting the lowest responsive bid, based upon the total sum of the extension of unit prices for the bid items.

The Plans and Contract Provisions for the proposed work may be downloaded from the internet at the Kitsap County Website at http://www.kitsapgov.com/purchasing/bids.htm.

DESCRIPTION OF WORK

This contract provides for the installation of a pre-engineered, waterless restroom at Point No Point Park in Kitsap County. Materials for the pre-engineered restroom will be furnished by Kitsap County and delivered to the site by the manufacturer, Romtec. The work proposed includes, but is not limited to, demolition, site preparation, erosion control, traffic safety and control and related work, electrical connection, utility coordination, permeable concrete pavers, cement concrete slab, cement concrete curb, vault installation, erection of the pre-engineered restroom, and site restoration. All work shall be in accordance with the attached Contract Plans, these Contract Provisions, the Standard Specifications, and the attached Romtec Plans and Specifications.

NOTICE TO ALL PLAN HOLDERS

The office of the Kitsap County Parks Department Project Manager who will show this project to prospective bidders is located at the Kitsap County Parks Department, 614 Division Street, MS-1, Port Orchard, Washington. Communications regarding the project shall be directed to Ric Catron at 360.337.5361 or email at rcatron@co.kitsap.wa.us. A non-mandatory site walk to view the project will be conducted by the County at the project site on April 27, 2016, starting at 11:00 AM. To obtain a Bid Proposal Package at no cost or to be added to the Plan Holder List, please call Colby Wattling at 360.337.7036 or email at cwattling@co.kitsap.wa.us.

KITSAP COUNTY BOARD OF COMMISSIONERS
KITSAP COUNTY DEPARTMENT OF PUBLIC WORKS

POINT NO POINT PARK RESTROOM

PROPOSAL

The Honorable Board of Commissioners
Kitsap County
614 Division Street
Port Orchard, Washington 98366

1. Pursuant to and in compliance with your Advertisement for Bids and the other documents relating thereto, the undersigned Bidder, having familiarized themselves with the terms of the project related to those items herein bid, being aware of the local conditions affecting the performance of a Contract covering the items bid, having knowledge of the cost of the work at the place where the work is to be done, having familiarized themselves with the Contract Documents, hereby proposes and agrees to perform the work and/or to furnish the equipment, and to furnish any and all of the labor, materials, tools, expendable equipment and all utility and transportation services necessary to perform a Contract covering any or all of those items herein bid and to complete in a workmanlike manner all work covered by said Contract in connection with the Owner's Point No Point Park Restroom Project, for an amount computed upon the basis of the quantity of work actually performed at the following bid prices:

NOTE: UNIT PRICES FOR ALL ITEMS, ALL EXTENSIONS, AND THE TOTAL AMOUNT OF BID MUST BE SHOWN. All prices shall be in legible figures (not words) written in ink or typed. The proposal shall include: A unit price for each item (omitting digits more than four places to the right of the decimal point); An extension for each unit price (omitting digits more than two places to the right of the decimal point); The total contract price (the sum of all extensions).

POINT NO POINT PARK RESTROOM

Item No.	Qty.	Unit	Item Name (WSDOT Standard Item Number)	Unit Price Dollars and Cents	Amount Dollars and Cents
1	1	L.S.	MOBILIZATION (0001)		
2	1	L.S.	REMOVAL OF STRUCTURE AND OBSTRUCTION (0050)		
3	1	L.S.	PROTECTION OF EXISTING UTILITIES INCL. POT HOLING (N.S.)		
4	10	C.Y.	UNSUITABLE FOUNDATION EXCAVATION INCL. HAUL (0350)		
5	19	TON	GRAVEL BORROW INCL. HAUL (0421)		
6	10	C.Y.	EMBANKMENT COMPACTION (0470)		
7	5	TON	PERMEABLE BALLAST (5035)		
8	2	TON	CHOKER COURSE (N.S.)		
9	5	TON	CRUSHED SURFACING TOP COURSE (5120)		
10	1	L.S.	EROSION/WATER POLLUTION CONTROL (N.S.)		
11	30	L.F.	STRAW WATTLE (6479)		
12	30	L.F.	HIGH VISIBILITY FENCE (6630)		
13	108	L.F.	TEMPORARY 6 FOOT CHAIN LINK FENCE (N.S.)		

Item No.	Qty.	Unit	Item Name (WSDOT Standard Item Number)	Unit Price Dollars and Cents	Amount Dollars and Cents
14	22	L.F.	CEMENT CONCRETE PEDESTRIAN CURB (6707)		
15	1	L.S.	CEMENT CONCRETE SLAB (N.S.)		
16	1	L.S.	CONSTRUCT PRE-ENGINEERED RESTROOM (N.S.)		
17	1	L.S.	ELECTRICAL (N.S.)		
18	1	L.S.	PROJECT TEMPORARY TRAFFIC CONTROL (6971)		
19	1	L.S.	TYPE B PROGRESS SCHEDULE (7003)		
20	5	MGAL	WATER (7018)		
21	1	L.S.	RELOCATE WHEEL STOP (N.S.)		
22	1	L.S.	PROJECT SURVEYING (N.S.)		
23	1	EST.	REIMBURSEMENT FOR THIRD PARTY DAMAGE (7725)		
24	1	CALC	MINOR CHANGE (7728)		
25	1	L.S.	SPCC PLAN (7736)		
26	1	L.S.	PERMEABLE PAVERS (N.S.)		
			SUBTOTAL:		
			SALES TAX AT 8.7%:		
			CONTRACT TOTAL AMOUNT:		

2. BIDDER SHALL SHOW SALES TAX IN THE SPACE PROVIDED, in accordance with Section 1-07.2 of Special Provisions.

3. The undersigned Bidder hereby proposes and agrees to commence work under this Contract, if awarded to them, in accordance with Sections 1-08.4 and 1-08.5 of the Special Provisions. They further agree to complete the contract within **30 working days**.

4. The agreed liquidated damage to the Owner shall be in accordance with Liquidated Damages as described in the Standard Specifications, Amendments thereto, and Special Provisions.

5. The Owner reserves the right to delete all or any portions of the work as outlined in the Contract Document.

6. The required bid security in the amount of five percent (5%) of the total bid is hereto attached.

7. It is understood that the Contractor is responsible for obtaining and completing all required government forms.

8. Receipt of the following Addenda to the Contract Document is hereby acknowledged.

ADDENDUM #	DATE OF RECEIPT OF ADDENDUM	SIGNED ACKNOWLEDGMENT
1		
2		
3		
4		
5		

(Note: Failure to acknowledge receipt of the Addenda may be considered an irregularity in the proposal).

9. Notice of Acceptance of this bid or requests for additional information should be addressed to the undersigned at the address stated below and unless otherwise notified in writing, this address shall be used by the successful bidder during the life of the Contract for all official notices.

10. By signing this Proposal, the Bidder certifies that they have read and understand all of the terms and Conditions of the Contract Plans, Standard Specifications, the Amendments there to, and these Special Provisions, and agrees to comply with them.

Date: _____

Proper Name of Bidder (Type or Print): _____

By (Signature): _____

Name and Title (Type or Print Name and Title of Signatory): _____

Street Address: _____

City, State and Zip Code: _____

Telephone Number with Area Code: _____

Fax Number with Area Code: _____

Mailing Address, if different from above: _____

_____

THIS PAGE INTENTIONALLY LEFT BLANK

Failure to return this Declaration as part of the bid proposal package will make the bid nonresponsive and ineligible for award.

NON-COLLUSION DECLARATION

I, by signing the proposal, hereby declare, under penalty of perjury under the laws of the United States that the following statements are true and correct:

1. That the undersigned person(s), firm, association or corporation has (have) not, either directly or indirectly, entered into any agreement, participated in any collusion, or otherwise taken any action in restraint of free competitive bidding in connection with the project for which this proposal is submitted.
2. **That by signing the signature page of this proposal, I am deemed to have signed and to have agreed to the provisions of this declaration.**

NOTICE TO ALL BIDDERS

To report rigging activities call:

1-800-424-9071

The U.S. Department of Transportation (USDOT) operates the above toll-free "hotline" Monday through Friday, 8:00 a.m. to 5:00 p.m., eastern time. Anyone with knowledge of possible bid rigging, bidder collusion, or other fraudulent activities should use the "hotline" to report such activities.

The "hotline" is part of USDOT's continuing effort to identify and investigate highway construction contract fraud and abuse and is operated under the direction of the USDOT Inspector General. All information will be treated confidentially and caller anonymity will be respected.

DOT Form 272-036H EF
Revised 5/06

THIS PAGE INTENTIONALLY LEFT BLANK

BIDDER RESPONSIBILITY STATEMENT

Each Bidder shall prepare and submit the following information with their bid.

By signing the signature page of the Proposal, the bidder affirms that the following information is true and correct.

Name of Bidder _____

Business Address _____

_____

A) MANDATORY BIDDER RESPONSIBILITY CRITERIA (RCW 39.04.350)

1. Washington State Contractors License Number _____

   Effective date _____

2. State of Washington Unified Business Identifier (UBI) No. _____

3. Do you have industrial insurance (worker's compensation) coverage for your employees working in Washington as required by Title 51 RCW?

   Yes _____ No _____ Not Applicable_____

4. Washington State Employment Security Department number as required by Title 51 RCW.

   Number _____ Not Applicable _____

5. Washington State Department of Revenue state excise tax registration number as required by Title 82 RCW.

   Number _____ Not Applicable _____

6. Have you ever been disqualified from bidding on any public works contracts under RCW 39.06.010 or 39.12.065(3)?

   Yes _____ No _____

(Continued on next page)

B) SUPPLEMENTAL BIDDER RESPONSIBILITY CRITERIA

(Special Provisions Section 1-02.14)

1. Do you owe delinquent taxes to the State of Washington Department of Revenue?

   Yes____ No____

2. Are you currently debarred or suspended from bidding by the Federal government?

   Yes____ No_____

3. Does your standard subcontract form include the subcontract responsibility language required by RCW 39.06.020?

   Yes ____ No_____

4. Do you have an established procedure which your company utilizes to validate the responsibility of each of your subcontractors and any sub-tier contractors?

   Yes_____ No_____

5. Do you have any record of prevailing wage violations in the last 5 years as determined by the Washington State Department of Labor and Industries?

   Yes_____ No_____

6. Have you had any claims against retainage or payment bonds for public works projects in the last three years?

   Yes_____ No_____

7. Has your company or its owners been convicted of a crime involving bidding on a public works contract in the last 5 years?

   Yes_____ No_____

8. Has your company had any public works contract terminated for cause or terminated for default by a government agency in the last 5 years?

   Yes_____ No_____

9. Has your company had any lawsuits with judgments entered against the company in the last 5 years?

   Yes_____ No_____

(Continued on next page)

C) PROJECT SPECIFIC SUPPLEMENTAL BIDDER RESPONSIBILITY CRITERIA

1. Gross Amount of Contracts Now in Hand: $ _____

2. General Type of Work Performed by your Company:

   _____

   _____

3. List more important construction projects completed by your company in the last 5 years. Include project name, year, approximate costs, and name and phone number of project engineer or owner.

   _____

   _____

   _____

   _____

   _____

   _____

4. Bank References: _____

   _____

5. Bonding Company: _____

   _____

Supporting documentation verifying that the bidder meets the supplemental and project specific responsibility criteria stated in Sections B and C above may be requested by the Contracting Agency in accordance with Section 1-02.14 of the Special Provisions.

THIS PAGE INTENTIONALLY LEFT BLANK

BID BOND

KNOW ALL MEN BY THESE PRESENTS, that we, the undersigned,

as Principal, and _____

as Surety, are hereby held and firmly bound unto _____

_____

as Owner in the penal sum of _____

for payment of which, well and truly to be made, we hereby jointly and severally bind

ourselves, successors and assigns. Signed this _____ day of _____, 2016.

The Condition of the above obligation is such that whereas the Principal has submitted to _____ a certain BID, attached hereto and made a part

hereof to enter a contract in writing, for the _____

_____

_____

NOW, THEREFORE,

(a) If said BID be rejected, or

(b) If said Bid shall be accepted and the Principal shall execute and deliver a contract in the Form of Contract attachment hereto (properly completed in accordance with said BID) and shall furnish a BOND for faithful performance of said contract, and for the payment of all persons performing labor and furnishing materials in connection therewith, and shall in all other respects perform the agreement created by the acceptance of said BID, then this obligation shall be void, otherwise the same shall remain in force and effect; it being expressly understood and agreed that the liability of the Surety for any and all claims hereunder shall, in no event exceed the penal amount of this obligation as herein stated.

The Surety, for value received, hereby stipulates and agrees that the obligations of said Surety and its BOND shall be in no way impaired or affected by any extension of the time within which the OWNER may accept such BID; and said Surety does hereby waive notice of any such extension.

IN WITNESS WHEREOF, the Principal and the Surety have hereunto set their hands and seals, and such of them as are Corporations have set their Corporation seals to be hereto affixed and these presents to be signed by their proper officers, the day and year first set forth above.

_____
Principal

_____
Surety

By: _____

AGREEMENT

This agreement, made and entered into this day of _____, 2016, between Kitsap County, through the BOARD OF COUNTY COMMISSIONERS of Kitsap County, State of Washington, hereinafter referred to as County, and, _____ _____, a general Contractor licensed by the State of Washington, for themselves, their heirs, executors, administrators, successors, and assigns, hereinafter called Contractor.

WITNESSETH:

WHEREAS, County desires to improve the Point No Point Park Restroom Facility and

WHEREAS, Contractor has been selected by competitive bid as the "lowest responsive bidder" as that term is defined in RCW 39.04.010:

NOW THEREFORE, County and Contractor mutually agree as follows:

CONTRACT DOCUMENTS:
The Agreement between the parties is expressed in the Contract Documents which includes the Invitation for Bids, the accepted Proposal, the Non-Collusion Affidavit, Statement of Bidders Qualifications, Bid Bond, Project Plans, Standard Specifications, Special Provisions and this Agreement.

(1) DESCRIPTION OF WORK:

This contract provides for the installation of a pre-engineered, waterless restroom at Point No Point Park in Kitsap County. Materials for the pre-engineered restroom will be furnished by Kitsap County and delivered to the site by the manufacturer, Romtec. The work proposed includes, but is not limited to, demolition, site preparation, erosion control, traffic safety and control and related work, electrical connection, utility coordination, permeable concrete pavers, cement concrete slab, cement concrete curb, vault installation, erection of the pre-engineered restroom, and site restoration. All work shall be in accordance with the attached Contract Plans, these Contract Provisions, the Standard Specifications, and the attached Romtec Plans and Specifications.

Contractor agrees to furnish all materials, labor, carriage, tools, equipment, apparatus, facilities and anything else necessary to perform and complete in a workmanlike manner the work called for in the Contract Documents titled: "Point No Point Park Restroom".

(2) BINDING EFFECT:
The covenants and conditions contained in this Agreement shall apply to and bind the parties, heirs, legal representatives, and assigns of the parties.

(3) TIME IS OF THE ESSENCE:
The Contractor agrees to work promptly and fully complete the work within the limits as described in the Contract Documents. Failure to complete within the allowed time limit will subject the Contractor to the payment of liquidated damages, as described in the State of Washington Standard Specifications for Road, Bridge and Municipal Construction, in Section 1-08.9, PROSECUTION AND PROGRESS.

(4) TIME FOR COMPLETION:
The work to be performed under this Agreement shall commence in accordance with Sections 1-08.4 and 1-08.5 of the Special Provisions and shall be physically completed within **30 working days**.

(5) COMPENSATION:
The County agrees to pay the Contractor for the work described and completed according to the Contract Documents the sum of $ _____.
This sum shall include state sales tax.

(6) INDEPENDENT CONTRACTOR:
The Contractor shall perform the services under this agreement as an independent Contractor and not as an agent, employee or servant of the County. The parties agree that the Contractor is not entitled to any benefits or rights enjoyed by employees of the County. Contractor shall comply with all laws regarding workers' compensation.

(7) DISCRIMINATION AND ADA:
The Contractor agrees to comply with all provisions of the Americans with Disabilities Act and all regulations interpreting or enforcing said act. The Contractor agrees to comply with all Federal, State and County laws and regulations in effect pertaining to nondiscrimination. Violation of this section may be treated as a breach of this Agreement.

(8) LIABILITY FOR NEGLIGENCE:
The Contractor shall be liable for any additional expenses incurred by the County as a result of carelessness or negligence on the part of the Contractor, or Contractor's agents, or Contractor's employees. The Contractor agrees that the County may deduct such additional costs on its own behalf from monies due or to become due to the Contractor.

(9) TERMINATION:
This contract may be terminated by the officials or agents of the County authorized to contract for or supervise the execution of such work in accordance with Section 1-08.10 of the Standard Specifications for Road, Bridge, or Municipal Construction.

(10) MODIFICATION
There shall be no modification of this agreement, except in writing, executed with the same formalities as this present instrument.
Change Orders totaling less than 10% of the total contract amount may be executed by The Director of Public Works or his authorized agent. Change Orders that exceed 10%

of the total Contract amount shall be valid provided they are executed by the Chair of the Board of County Commissioners or her authorized agent.

(11) HOLD HARMLESS:
Contractor shall indemnify and hold County and its officers and employees harmless from, and shall process and defend at its own expense, all claims, demands or suits at law or equity arising in whole or in part from Contractor's performance of any of its obligations under this Agreement; provided that nothing herein shall require Contractor to indemnify County against and hold harmless County from claims, demands, or suits based upon the sole negligence of the County, its agents, officers, and employees; and provided further that if claims or suits are caused by or result from the concurrent negligence of (a) Contractor or Contractor's agents or employees, and (b) County or County's agents, officers, or employees, this indemnity provision shall be valid and enforceable only to the extent of Contractor's negligence or the negligence of Contractor's agents or employees.

Contractor expressly assumes potential liability for actions brought by Contractor's own employees against County; and, solely for the purpose of this indemnification and defense, Contractor specifically waives any immunity under the state industrial insurance law, Title 51 RCW. Contractor recognizes that this waiver was specifically entered into pursuant to the provisions of RCW 4.24.115 and was subject of mutual negotiation.

(12) INSURANCE REQUIREMENTS:
Section 1-07.18 of the Special Provisions shall govern this contract.

(13) VENUE AND CHOICE OF LAW:
Any action at law, suit in equity, or other judicial proceeding for the enforcement of this contract or any provisions thereof shall be instituted only in the court of the State of Washington, County of Kitsap. It is mutually understood and agreed that this contract shall be governed by the laws of the State of Washington, both as to interpretation and performance.

(14) INTEGRATION CLAUSE:
This instrument embodies the whole agreement of the parties. There are no promises, terms, conditions or obligations other than those contained herein; and this contract shall supersede all previous communications, representations or agreements, either verbal or written, between parties.

(15) CONTRACT BOND:
Payment and Performance bonds for this project have been issued by _____

Surety Company of _____(Street address) _____

Telephone: _____Contact Person: _____

in the amount of_____

IN WITNESS WHEREOF, the said Contractor has executed this instrument, and the said Board of County Commissioners of aforesaid County pursuant to resolution duly adopted has caused this instrument to be executed by and in the name of said Board by its Chair, duly attested by its Clerk, the day and year first above written, and the seal of said Board to be hereunto affixed on the date this instrument first above written.

CONTRACTOR

_____

BY:_____

TITLE_____

BOARD OF COUNTY COMMISSIONERS
KITSAP COUNTY, WASHINGTON

_____
Edward E. Wolfe, Chair

_____
Charlotte Garrido, Commissioner

_____
Robert Gelder, Commissioner

Foregoing contract approved and ratified:

_____
ATTEST:

_____
DANA DANIELS, Clerk of the Board

Local Agency Performance Bond

PERFORMANCE BOND

to [City of _____ or _____ County], WA

Bond No. _____

The [City of _____ or _____ County], Washington ([City or County]) has awarded to _____ (Principal), a contract for the construction of the project designated as _____ ,Project No. _____ , in [location], Washington (Contract), and said Principal is required to furnish a bond for performance of all obligations under the Contract.

The Principal, and _____ (Surety), a corporation, organized under the laws of the State of _____ and licensed to do business in the State of Washington as surety and named in the current list of "Surety Companies Acceptable in Federal Bonds" as published in the Federal Register by the Audit Staff Bureau of Accounts, U.S. Treasury Dept., are jointly and severally held and firmly bound to the [City or County], in the sum of _____ US Dollars ($ _____) Total Contract Amount, subject to the provisions herein.

This statutory performance bond shall become null and void, if and when the Principal, its heirs, executors, administrators, successors, or assigns shall well and faithfully perform all of the Principal's obligations under the Contract and fulfill all terms and conditions of all duly authorized modifications, additions, and changes to said Contract that may hereafter be made, at the time and in the manner therein specified, and if such performance obligations have not been fulfilled, this bond shall remain in force and effect.

The Surety for value received agrees that no change, extension of time, alteration or addition to the terms of the Contract, the specifications accompanying the Contract, or to the work to be performed under the Contract shall in any way affect its obligation on this bond, and waives notice of any change, extension of time, alteration or addition to the terms of the Contract or the work performed. The Surety agrees that modifications and changes to the terms and conditions of the Contract that increase the total amount to be paid the Principal shall automatically increase the obligation of the Surety on this bond and notice to Surety is not required for such increased obligation.

This bond may be executed in two (2) original counterparts, and shall be signed by the parties' duly authorized officers. This bond will only be accepted if it is accompanied by a fully executed and original power of attorney for the office executing on behalf of the surety.

PRINCIPAL		SURETY	
Principal Signature	Date	Surety Signature	Date
Printed Name	Date	Printed Name	Date
Title		Title	

Name, address, and telephone of local office/agent of Surety Company is:

Approved as to form:

[City or County] Attorney, [City of _____ or _____ County] _____ Date

DOT Form 272-002A EF
08/2012

THIS PAGE INTENTIONALLY LEFT BLANK

Local Agency Payment Bond -
Highway Construction

PUBLIC WORKS PAYMENT BOND

to [City of _____ or _____ County], WA

Bond No. _____

The [City of _____ or _____ County], Washington ([City or County]) has awarded to _____ (Principal), a contract for the construction of the project designated as _____ ,Project No. _____, in [location], Washington (Contract), and said Principal is required under the terms of that Contract to furnish a payment bond in accord with Title 39.08 Revised Code of Washington (RCW) and (where applicable) 60.28 RCW.

The Principal, and _____ (Surety), a corporation organized under the laws of the State of _____ and licensed to do business in the State of Washington as surety and named in the current list of "Surety Companies Acceptable in Federal Bonds" as published in the Federal Register by the Audit Staff Bureau of Accounts, U.S. Treasury Dept., are jointly and severally held and firmly bound to the [City or County], in the sum of _____ US Dollars ($ _____) Total Contract Amount, subject to the provisions herein.

This statutory payment bond shall become null and void, if and when the Principal, its heirs, executors, administrators, successors, or assigns shall pay all persons in accordance with RCW 39.08, 39.12, and 60.28 including all workers, laborers, mechanics, subcontractors, and materialmen, and all person who shall supply such contractor or subcontractor with provisions and supplies for the carrying on of such work, and all taxes incurred on said Contract under Titles 50 and 51 RCW and all taxes imposed on the Principal under Title 82 RCW, and if such payment obligations have not been fulfilled, this bond shall remain in full force and effect.

The Surety for value received agrees that no change, extension of time, alteration or addition to the terms of the Contract, the specifications accompanying the Contract, or to the work to be performed under the Contract shall in any way affect its obligation on this bond, and waives notice of any changes, extension of time, alteration or addition to the terms of the Contract or the work performed. The Surety agrees that modifications and changes to the terms and conditions of the Contract that increase the total amount to be paid the Principal shall automatically increase the obligation of the Surety on this bond and notice to Surety is not required for such increased obligation.

This bond may be executed in two (2) original counterparts, and shall be signed by the parties' duly authorized officers. This bond will only be accepted if it is accompanied by a fully executed and original power of attorney for the office executing on behalf of the surety.

PRINCIPAL		SURETY	
Principal Signature	Date	Surety Signature	Date
Printed Name	Date	Printed Name	Date
Title		Title	

Name, address, and telephone of local office/agent of Surety Company is:

Approved as to form:

[City or County] Attorney, [City of _____ or _____ County] _____ Date

DOT Form 272-003A EF
08/2012

THIS PAGE INTENTIONALLY LEFT BLANK

AMENDMENTS TO THE STANDARD SPECIFICATIONS

INTRODUCTION

The following Amendments and Special Provisions shall be used in conjunction with the 2016 Standard Specifications for Road, Bridge, and Municipal Construction.

AMENDMENTS TO THE STANDARD SPECIFICATIONS

The following Amendments to the Standard Specifications are made a part of this contract and supersede any conflicting provisions of the Standard Specifications. For informational purposes, the date following each Amendment title indicates the implementation date of the Amendment or the latest date of revision.

Each Amendment contains all current revisions to the applicable section of the Standard Specifications and may include references which do not apply to this particular project.

Section 1-06, Control of Material
January 4, 2016

This section is supplemented with the following new section and subsections:

1-06.6 Recycled Materials

The Contractor shall make their best effort to utilize recycled materials in the construction of the project; the use of recycled concrete aggregate as specified in Section 1-06.6(1)A is a requirement of the Contract.

The Contractor shall submit a Recycled Material Utilization Plan as a Type 1 Working Drawing within 30 calendar days after the Contract is executed. The plan shall provide the Contractor's anticipated usage of recycled materials for meeting the requirements of these Specifications. The quantity of recycled materials will be provided in tons and as a percentage of the Plan quantity for each material listed in Section 9-03.21(1)E Table on Maximum Allowable Percent (By Weight) of Recycled Material. When a Contract does not include Work that requires the use of a material that is included in the requirements for using materials the Contractor may state in their plan that no recycled materials are proposed for use.

Prior to Physical Completion the Contractor shall report the quantity of recycled materials that were utilized in the construction of the project for each of the items listed in Section 9-03.21. The report shall include hot mix asphalt, recycled concrete aggregate, recycled glass, steel furnace slag and other recycled materials (e.g. utilization of on-site material and aggregates from concrete returned to the supplier). The Contractor's report shall be provided on DOT Form 350-075 Recycled Materials Reporting.

1-06.6(1) Recycling of Aggregate and Concrete Materials

1-06.6(1)A General

The minimum quantity of recycled concrete aggregate shall be 25 percent of the total quantity of aggregate that is incorporated into the Contract for those items listed in Section 9-03.21(1)E Table on Maximum Allowable Percent (By Weight) of Recycled Material that allow the use of recycled concrete aggregate. The percentage of recycled material incorporated into the project for meeting the required percentage will be calculated in tons based on the quantity of recycled concrete used on the entire Contract and not as individual items.

If the Contractor's total cost for Work with recycled concrete aggregate is greater than without the Contractor may choose to not use recycled concrete aggregate. When the Contractor does not meet the minimum requirement of 25 percent recycled concrete aggregate for the Contract due to costs or any other reason the following shall be submitted:

1. A cost estimate for each material listed in Section 9-03.21(1)E that is utilized on the Contract. The cost estimate shall include the following:

    a. The estimated costs for the Work for each material with 25 percent recycled concrete aggregate. The cost estimate shall include for each material a copy of the price quote from the supplier with the lowest total cost for the Work.

    b. The estimated costs for the Work for each material without recycled concrete aggregate.

The Contractor's cost estimates shall be submitted as an attachment to the Recycled Materials Reporting form.

Section 1-07, Legal Relations and Responsibilities to the Public
January 4, 2016

1-07.1 Laws to be Observed

In the second to last sentence of the third paragraph, "WSDOT" is revised to read "Contracting Agency".

Section 1-08, Prosecution and Progress
January 4, 2016

1-08.1(1) Prompt Payment, Subcontract Completion and Return of Retainage Withheld

In item number 5 of the first paragraph, "WSDOT" is revised to read "Contracting Agency".

Section 5-02, Bituminous Surface Treatment
January 4, 2016

5-02.3(2) Preparation of Roadway Surface
This section is supplemented with the following new subsection:

5-02.3(2)E Crack Sealing
Where shown in the Plans, seal cracks and joints in the pavement in accordance with Section 5-04.3(5)C.

Section 5-04, Hot Mix Asphalt
January 4, 2016

5-04.2 Materials
The first paragraph is supplemented with the following new items:

Hot Poured Sealant 9-04.2(1)A
Sand Slurry 9-04.2(1)B

This section is supplemented with the following new paragraph:

The requirements of Section 1-06.6 do not apply to the portland cement and fine aggregate used in sand slurry.

5-04.3(5)C Crack Sealing
This section's content is deleted and replaced with the following new subsections:

5-04.3(5)C1 General
When the Proposal includes a pay item for crack sealing, all cracks and joints ¼ inch in width and greater shall be sealed. Cracks and joints shall be thoroughly clean, dry and free of all loose and foreign material when filled with crack sealant material. Immediately prior to filling a crack or joint with the sealant material a hot air lance shall be used to dry and warm the pavement surfaces within the crack or joint. Pavement shall not be overheated and direct flame dryers shall not be used. Routing cracks and joints is not required.

Where cracks and joints are to be filled with sand slurry thoroughly mix the components and pour the mixture into the cracks and joints until full. Additional CSS-1 emulsified asphalt may be added to the sand slurry as needed for the mixture to be workable to completely fill the crack or joint. Strike off the sand slurry flush with the existing pavement surface and allow the mixture to cure. Cracks or joints that were not completely filled shall be topped off with additional sand slurry. Do not place the HMA overlay until the slurry has fully cured.

Where cracks and joints are to be filled with hot poured sealant the material shall be applied in accordance with these requirements and the manufacturer's recommendations. The manufacturer's recommendations shall be furnished to the Engineer prior to the start of work and shall include recommended heating time and temperatures, allowable storage time and temperatures after initial heating, allowable reheating criteria, and application temperature range.

Crack sealing with hot poured sealants shall be controlled to confine the material within the crack or joint. Any overflow of sealant shall be cleaned from the pavement surface. If, in the opinion of the Engineer, the Contractor's method of sealing the cracks and joints with hot poured sealant results in an excessive amount of material on the pavement surface, the operation shall be stopped and corrected to eliminate the excess material.

5-04.3(5)C2 Crack Sealing Areas Prior to Paving

In areas where HMA will be placed the cracks and joints shall be filled with sand slurry.

5-04.3(5)C3 Crack Sealing Areas Not to be Paved

In areas where HMA will not be placed the cracks and joints shall be filled as follows:

1. Cracks ¼ inch to 1 inch in width shall be filled with hot poured sealant.

2. Cracks and joints greater than 1 inch in width shall be filled with sand slurry.

5-04.3(5)C4 Crack Sealing Areas Prior to a Bituminous Surface Treatment

In areas where a BST will be placed the cracks and joints shall be filled per Section 5-04.3(5)C3.

5-04.4 Measurement

The following new paragraph is inserted after the third paragraph:

Crack Sealing-LF will be measured by the linear foot along the line of the crack.

5-04.5 Payment

The Bid item "Crack Sealing" is revised to read "Crack Sealing-FA".

The following is inserted after the paragraph following the Bid item "Crack Sealing-FA", by force account (after the preceding Amendment is applied):

"Crack Sealing-LF", per linear foot.
The unit Contract price per linear foot for "Crack Sealing-LF" shall be full payment for all costs incurred to perform the Work described in Section 5-04.3(5)C.

Section 6-02, Concrete Structures
January 4, 2016

6-02.3(2)A1 Contractor Mix Design for Concrete Class 4000D

The following new sentence is inserted after the second sentence of the last paragraph:

> Mix designs using shrinkage reducing admixture shall state the specific quantity required.

The following new sentence is inserted before the last sentence of the last paragraph:

> Testing samples of mixes using shrinkage reducing admixture shall use the admixture amount specified in the mix design submittal.

6-02.3(26)D2 Test Block Dimensions

The first sentence is revised to read:

> The dimensions of the test block perpendicular to the tendon in each direction shall be the smaller of twice the minimum edge distance or the minimum spacing specified by the special anchorage device manufacturer, with the stipulation that the concrete cover over any confining reinforcing steel or supplementary skin reinforcement shall be appropriate for the project-specific application and circumstances.

Section 6-14, Geosynthetic Retaining Walls
January 4, 2016

6-14.5 Payment

The bid item “Concrete Fascia Panel”, per square foot, and the paragraph following this bid item are revised to read:

> Concrete Fascia Panel For Geosynthetic Wall”, per square foot.
>
> All costs in connection with constructing the concrete fascia panels as specified shall be included in the unit Contract price per square foot for “Concrete Fascia Panel For Geosynthetic Wall”, including all steel reinforcing bars, premolded joint filler, polyethylene bond breaker strip, joint sealant, PVC pipe for weep holes, exterior surface finish, and pigmented sealer (when specified), constructing and placing the concrete footing, edge beam, anchor beam, anchor rod assembly, and backfill.

Section 6-19, Shafts
January 4, 2016

6-19.4 Measurement
The first paragraph is revised to read:

> Soil excavation for shaft, including haul, will be measured by the cubic yards of shaft excavated. The cubic yards will be computed using the shaft diameter, top of shaft elevation and bottom of shaft elevation shown in the Plans, less all rock excavation measured as specified for rock excavation. Excavation between the existing ground line and the top of shaft elevation is considered incidental to soil excavation for shaft and will not be measured.

The second paragraph is deleted.

6-19.5 Payment
The paragraph following the bid item "Soil Excavation For Shaft Including Haul", per cubic yard is revised to read:

> The unit Contract price per cubic yard for "Soil Excavation For Shaft Including Haul" shall be full pay for performing the work as specified, including all costs in connection with furnishing, mixing, placing, maintaining, containing, collecting, and disposing of all mineral, synthetic, and water slurry, and disposing of groundwater collected by the shaft excavation, and the incidental excavation of soils between the top of shaft elevation shown in the Plans and the existing ground line.

Section 8-01, Erosion Control and Water Pollution Control
January 4, 2016

8-01.2 Materials
This section is supplemented with the following new paragraph:

> Recycled concrete, in any form, shall not be used for any Work defined in Section 8-01.

Section 8-10, Guide Posts
January 4, 2016

8-10.3 Construction Requirements
The last sentence of the second paragraph is deleted.

Section 8-22, Pavement Marking
January 4, 2016

8-22.4 Measurement
The first two sentences of the fourth paragraph are revised to read:

> The measurement for "Painted Wide Lane Line", "Plastic Wide Lane Line", "Profiled Plastic Wide Lane Line", "Painted Barrier Center Line", "Plastic Barrier Center Line", "Painted Stop Line", "Plastic Stop Line", "Painted Wide Dotted Entry Line", or "Plastic Wide Dotted Entry Line" will be based on the total length of each painted, plastic or profiled plastic line installed. No deduction will be made for the unmarked area when the marking includes a broken line such as, wide broken lane line, drop lane line, wide dotted lane line or wide dotted entry line.

8-22.5 Payment
The following two new Bid items are inserted after the Bid item "Plastic Crosshatch Marking", per linear foot:

> "Painted Wide Dotted Entry Line", per linear foot.
>
> "Plastic Wide Dotted Entry Line", per linear foot.

Section 9-03, Aggregates
January 4, 2016

9-03.21(1)B Concrete Rubble
This section, including title, is revised to read:

> **9-03.21(1)B Recycled Concrete Aggregate**
> Recycled concrete aggregates are coarse and fine aggregates manufactured from hardened concrete mixtures.
>
> Recycled concrete, in any form, shall not be placed below the ordinary high water mark of any water of the State.

Section 9-04, Joint and Crack Sealing Materials
January 4, 2016

9-04.2(1) Hot Poured Joint Sealants
This section's content is deleted and replaced with the following new subsections:

> **9-04.2(1)A Hot Poured Sealant**
> Hot poured sealant shall be sampled in accordance with ASTM D5167 and tested in accordance with ASTM D5329. Hot poured sealant shall have a minimum Cleveland Open Cup Flash Point of 205°C in accordance with AASHTO T 48.

9-04.2(1)A1 Hot Poured Sealant for Cement Concrete Pavement
Hot poured sealant for cement concrete pavement shall meet the requirements of ASTM D6690 Type IV, except for the following:

1. The Cone Penetration at 25°C shall be 130 maximum.

2. The extension for the Bond, non-immersed, shall be 100 percent.

9-04.2(1)A2 Hot Poured Sealant for Bituminous Pavement
Hot poured sealant for bituminous pavement shall meet the requirements of ASTM D6690 Type II.

9-04.2(1)B Sand Slurry for Bituminous Pavement
Sand slurry is mixture consisting of the following components measured by total weight:

1. Twenty percent CSS-1 emulsified asphalt,

2. Two percent Portland cement, and

3. Seventy-eight percent fine aggregate meeting the requirements of 9-03.1(2)B Class 2. Fine aggregate may be damp (no free water).

Section 9-07, Reinforcing Steel
January 4, 2016

9-07.1(1)A Acceptance of Materials
The first sentence of the first paragraph is revised to read:

> Reinforcing steel rebar manufacturers shall comply with the National Transportation Product Evaluation Program (NTPEP) Work Plan for Reinforcing Steel (rebar) Manufacturers.

The first sentence of the second paragraph is revised to read:

Steel reinforcing bar manufacturers use either English or a Metric size designation while stamping rebar.

SPECIAL PROVISIONS

INTRODUCTION TO THE SPECIAL PROVISIONS

(August 14, 2013 APWA GSP)

The work on this project shall be accomplished in accordance with the Standard Specifications for Road, Bridge and Municipal Construction, 2016 edition, as issued by the Washington State Department of Transportation (WSDOT) and the American Public Works Association (APWA), Washington State Chapter (hereafter "Standard Specifications"). The Standard Specifications, as modified or supplemented by the Amendments to the Standard Specifications and these Special Provisions, all of which are made a part of the Contract Documents, shall govern all of the Work.

These Special Provisions are made up of both General Special Provisions (GSPs) from various sources, which may have project-specific fill-ins; and project-specific Special Provisions. Each Provision either supplements, modifies, or replaces the comparable Standard Specification, or is a new Provision. The deletion, amendment, alteration, or addition to any subsection or portion of the Standard Specifications is meant to pertain only to that particular portion of the section, and in no way should it be interpreted that the balance of the section does not apply.

The project-specific Special Provisions are not labeled as such. The GSPs are labeled under the headers of each GSP, with the effective date of the GSP and its source. For example:

(March 8, 2013 APWA GSP)
(April 1, 2013 WSDOT GSP)

Also incorporated into the Contract Documents by reference are:

- *Manual on Uniform Traffic Control Devices for Streets and Highways*, currently adopted edition, with Washington State modifications, if any
- *Standard Plans for Road, Bridge and Municipal Construction*, WSDOT/APWA, current edition

Contractor shall obtain copies of these publications, at Contractor's own expense.

THIS PAGE INTENTIONALLY LEFT BLANK

DIVISION 1 GENERAL REQUIREMENTS

Description of Work
This contract provides for the installation of a pre-engineered, waterless restroom at Point No Point Park in Kitsap County. Materials for the pre-engineered restroom will be furnished by Kitsap County and delivered to the site by the manufacturer, Romtec. The work proposed includes, but is not limited to, demolition, site preparation, erosion control, traffic safety and control and related work, electrical connection, utility coordination, permeable concrete pavers, cement concrete slab, cement concrete curb, vault installation, erection of the pre-engineered restroom, and site restoration. All work shall be in accordance with the attached Contract Plans, these Contract Provisions, the Standard Specifications, and the attached Romtec Plans and Specifications.

1-01 Definitions and Terms

1-01.3 Definitions
(January 4, 2016 APWA GSP)
Delete the heading **Completion Dates** and the three paragraphs that follow it, and replace them with the following:

Dates

Bid Opening Date
The date on which the Contracting Agency publicly opens and reads the Bids.

Award Date
The date of the formal decision of the Contracting Agency to accept the lowest responsible and responsive Bidder for the Work.

Contract Execution Date
The date the Contracting Agency officially binds the Agency to the Contract.

Notice to Proceed Date
The date stated in the Notice to Proceed on which the Contract time begins.

Substantial Completion Date
The day the Engineer determines the Contracting Agency has full and unrestricted use and benefit of the facilities, both from the operational and safety standpoint, any remaining traffic disruptions will be rare and brief, and only minor incidental work, replacement of temporary substitute facilities, plant establishment periods, or correction or repair remains for the Physical Completion of the total Contract.

Physical Completion Date
The day all of the Work is physically completed on the project. All documentation required by the Contract and required by law does not necessarily need to be furnished by the Contractor by this date.

Completion Date
The day all the Work specified in the Contract is completed and all the obligations of the Contractor under the contract are fulfilled by the Contractor. All documentation required by the Contract and required by law must be furnished by the Contractor before establishment of this date.

Final Acceptance Date
The date on which the Contracting Agency accepts the Work as complete.

Supplement this Section with the following:

All references in the Standard Specifications, Amendments, or WSDOT General Special Provisions, to the terms "Department of Transportation", "Washington State Transportation Commission", "Commission", "Secretary of Transportation", "Secretary", "Headquarters", and "State Treasurer" shall be revised to read "Contracting Agency".

All references to the terms "State" or "state" shall be revised to read "Contracting Agency" unless the reference is to an administrative agency of the State of Washington, a State statute or regulation, or the context reasonably indicates otherwise.

All references to "State Materials Laboratory" shall be revised to read "Contracting Agency designated location".

All references to "final contract voucher certification" shall be interpreted to mean the Contracting Agency form(s) by which final payment is authorized, and final completion and acceptance granted.

Additive
A supplemental unit of work or group of bid items, identified separately in the Bid Proposal, which may, at the discretion of the Contracting Agency, be awarded in addition to the base bid.

Alternate
One of two or more units of work or groups of bid items, identified separately in the Bid Proposal, from which the Contracting Agency may make a choice between different methods or material of construction for performing the same work.

Business Day
A business day is any day from Monday through Friday except holidays as listed in Section 1-08.5.

Contract Bond
The definition in the Standard Specifications for "Contract Bond" applies to whatever bond form(s) are required by the Contract Documents, which may be a combination of a Payment Bond and a Performance Bond.

Contract Documents
See definition for "Contract".

Contract Time
The period of time established by the terms and conditions of the Contract within which the Work must be physically completed.

Notice of Award
The written notice from the Contracting Agency to the successful Bidder signifying the Contracting Agency's acceptance of the Bid Proposal.

Notice to Proceed
The written notice from the Contracting Agency or Engineer to the Contractor authorizing and directing the Contractor to proceed with the Work and establishing the date on which the Contract time begins.

Traffic
Both vehicular and non-vehicular traffic, such as pedestrians, bicyclists, wheelchairs, and equestrian traffic.

1-02 Bid Procedures and Conditions

1-02.1 Prequalification of Bidders
Delete this Section and replace it with the following:

1-02.1 Qualifications of Bidder
(January 24, 2011 APWA GSP)
Before award of a public works contract, a bidder must meet at least the minimum qualifications of RCW 39.04.350(1) to be considered a responsible bidder and qualified to be awarded a public works project.

Add the following new section:

1-02.1(1) Supplemental Qualifications Criteria
(January 4, 2016 APWA GSP)

In addition, the Contracting Agency has established Contracting Agency-specific and/or project-specific supplemental criteria, in accordance with RCW 39.04.350(2), for determining Bidder responsibility, including the basis for evaluation and the deadline for appealing a determination that a Bidder is not responsible. These criteria are contained in Section 1-02.14 Option C of these Special Provisions.

1-02.2 Plans and Specifications
(June 27, 2011 APWA GSP)
Delete this section and replace it with the following:

Information as to where Bid Documents can be obtained or reviewed can be found in the Call for Bids (Advertisement for Bids) for the work.

After award of the contract, plans and specifications will be issued to the Contractor at no cost as detailed below:

To Prime Contractor	No. of Sets	Basis of Distribution
Reduced plans (11" x 17")	5	Furnished automatically upon award.
Contract Provisions	5	Furnished automatically upon award.
Large plans (e.g., 22" x 34")	5	Furnished automatically upon award.

Additional plans and Contract Provisions may be obtained by the Contractor from the source stated in the Call for Bids, at the Contractor's own expense.

1-02.4 Examination of Plans, Specifications, and Site of Work

1-02.4(2) Subsurface Information
Supplement this section with the following:

(March 8, 2013 APWA GSP)
The second sentence in the first paragraph is revised to read:

The Summary of Geotechnical Conditions and the boring logs, <u>if and when included</u> as an appendix to the Special Provisions, shall be considered as part of the Contract.

Supplement the preceding section with the following:

Geotechnical information for this project is attached to these Contract Provisions.

1-02.5 Proposal Forms

(June 27, 2011 APWA GSP)
Delete this section and replace it with the following:

The Proposal Form will identify the project and its location and describe the work. It will also list estimated quantities, units of measurement, the items of work, and the materials to be furnished at the unit bid prices. The bidder shall complete spaces on the proposal form that call for, but are not limited to, unit prices; extensions; summations; the total bid amount; signatures; date; and, where applicable, retail sales taxes and acknowledgment of addenda; the bidder's name, address, telephone number, and signature; the bidder's D/M/WBE commitment, if applicable; a State of Washington Contractor's Registration Number; and a Business License Number, if applicable. Bids shall be completed by typing or shall be printed in ink by hand, preferably in black ink. The required certifications are included as part of the Proposal Form.

The Contracting Agency reserves the right to arrange the proposal forms with alternates and additives, if such be to the advantage of the Contracting Agency. The bidder shall bid on all alternates and additives set forth in the Proposal Form unless otherwise specified.

1-02.6 Preparation of Proposal

(June 27, 2011 APWA GSP)
Supplement the second paragraph with the following:

4. If a minimum bid amount has been established for any item, the unit or lump sum price must equal or exceed the minimum amount stated.
5. Any correction to a bid made by interlineation, alteration, or erasure, shall be initialed by the signer of the bid.

Delete the last paragraph, and replace it with the following:

The Bidder shall make no stipulation on the Bid Form, nor qualify the bid in any manner.

A bid by a corporation shall be executed in the corporate name, by the president or a vice president (or other corporate officer accompanied by evidence of authority to sign).

A bid by a partnership shall be executed in the partnership name, and signed by a partner. A copy of the partnership agreement shall be submitted with the Bid Form if any D/M/WBE requirements are to be satisfied through such an agreement.

A bid by a joint venture shall be executed in the joint venture name and signed by a member of the joint venture. A copy of the joint venture agreement shall be submitted with the Bid Form if any D/W/MBE requirements are to be satisfied through such an agreement.

1-02.7 Bid Deposit
(March 8, 2013 APWA GSP)

Supplement this section with the following:

Bid bonds shall contain the following:

1. Contracting Agency-assigned number for the project;
2. Name of the project;
3. The Contracting Agency named as obligee;
4. The amount of the bid bond stated either as a dollar figure or as a percentage which represents five percent of the maximum bid amount that could be awarded;
5. Signature of the bidder's officer empowered to sign official statements. The signature of the person authorized to submit the bid should agree with the signature on the bond, and the title of the person must accompany the said signature;
6. The signature of the surety's officer empowered to sign the bond and the power of attorney.

If so stated in the Contract Provisions, bidder must use the bond form included in the Contract Provisions.

If so stated in the Contract Provisions, cash will not be accepted for a bid deposit.

Supplement the preceding section with the following:

Bidders shall use the Bid Bond form included with these Contract Provisions.

A bid deposit in the form of cash or check will not be accepted.

1-02.9 Delivery of Proposal

Delete this section and replace it with the following:

Each proposal shall be submitted in a sealed envelope, with the Project Name and Project Number as stated in the Call for Bids clearly marked on the outside of the envelope, or as otherwise required in the Bid Documents, to ensure proper handling and delivery.

The Contracting Agency will not open or consider any Bid Proposal that is received after the time specified in the Call for Bids for receipt of Bid Proposals, or received in a location other than that specified in the Call for Bids.

1-02.10 Withdrawing, Revising, or Supplementing Proposal

(July 23, 2015 APWA GSP)

Delete this section, and replace it with the following:

After submitting a physical Bid Proposal to the Contracting Agency, the Bidder may withdraw, revise, or supplement it if:

1. The Bidder submits a written request signed by an authorized person and physically delivers it to the place designated for receipt of Bid Proposals, and
2. The Contracting Agency receives the request before the time set for receipt of Bid Proposals, and

3. The revised or supplemented Bid Proposal (if any) is received by the Contracting Agency before the time set for receipt of Bid Proposals.

If the Bidder's request to withdraw, revise, or supplement its Bid Proposal is received before the time set for receipt of Bid Proposals, the Contracting Agency will return the unopened Proposal package to the Bidder. The Bidder must then submit the revised or supplemented package in its entirety. If the Bidder does not submit a revised or supplemented package, then its bid shall be considered withdrawn.

Late revised or supplemented Bid Proposals or late withdrawal requests will be date recorded by the Contracting Agency and returned unopened. Mailed, emailed, or faxed requests to withdraw, revise, or supplement a Bid Proposal are not acceptable.

1-02.12 Public Opening of Proposals

Supplement this section with the following:

Date of Opening Bids

The bid opening date for this project shall be **May 10, 2016**. The bids will be publicly opened and read after **3:00 PM**. on this date in the Port Madison Conference Room, fourth floor Kitsap County Administration Building located at the address shown below.

Sealed bids shall be received at or before the specified time at:

Kitsap County Purchasing Office
Fourth Floor Administration Building
619 Division Street
Port Orchard, Washington

Bids delivered in person or by private carrier (UPS, Federal Express, etc.) shall be addressed and delivered to the above location. Bids delivered by US Postal Service shall be addressed to:

Kitsap County Purchasing Office
614 Division Street, MS-07
Port Orchard WA 98366

Bidders are advised that bids not delivered in person may be subject to delay or loss. It is the bidder's sole responsibility to ensure timely delivery of their bid to the place of bid opening. Bids not received at the place of bid opening at or before the appointed time will not be considered, and shall be returned unopened to the bidder.

1-02.13 Irregular Proposals

(January 4, 2016 APWA GSP)

Delete this section and replace it with the following:

1. A proposal will be considered irregular and will be rejected if:

   a. The Bidder is not prequalified when so required;
   b. The authorized proposal form furnished by the Contracting Agency is not used or is altered;
   c. The completed proposal form contains any unauthorized additions, deletions, alternate Bids, or conditions;
   d. The Bidder adds provisions reserving the right to reject or accept the award, or enter into the Contract;
   e. A price per unit cannot be determined from the Bid Proposal;
   f. The Proposal form is not properly executed;

g. The Bidder fails to submit or properly complete a Subcontractor list, if applicable, as required in Section 1-02.6;
h. The Bidder fails to submit or properly complete a Disadvantaged Business Enterprise Certification, if applicable, as required in Section 1-02.6;
i. The Bidder fails to submit written confirmation from each DBE firm listed on the Bidder's completed DBE Utilization Certification that they are in agreement with the bidders DBE participation commitment, if applicable, as required in Section 1-02.6, or if the written confirmation that is submitted fails to meet the requirements of the Special Provisions;
j The Bidder fails to submit DBE Good Faith Effort documentation, if applicable, as required in Section 1-02.6, or if the documentation that is submitted fails to demonstrate that a Good Faith Effort to meet the Condition of Award was made;
k. The Bid Proposal does not constitute a definite and unqualified offer to meet the material terms of the Bid invitation; or
l. More than one proposal is submitted for the same project from a Bidder under the same or different names.

2. A Proposal may be considered irregular and may be rejected if:

a. The Proposal does not include a unit price for every Bid item;
b. Any of the unit prices are excessively unbalanced (either above or below the amount of a reasonable Bid) to the potential detriment of the Contracting Agency;
c. Receipt of Addenda is not acknowledged;
d. A member of a joint venture or partnership and the joint venture or partnership submit Proposals for the same project (in such an instance, both Bids may be rejected); or
e. If Proposal form entries are not made in ink.

1-02.14 Disqualification of Bidders

Delete this Section and replace it with the following:

A Bidder will be deemed not responsible if the Bidder does not meet the mandatory bidder responsibility criteria in RCW 39.04.350(1), as amended; or does not meet the following Supplemental Criteria:

1. Delinquent State Taxes

A. Criterion: The Bidder shall not owe delinquent taxes to the Washington State Department of Revenue unless they have a payment plan which has been approved by the Washington State Department of Revenue.

B. Documentation: The Bidder shall not be listed as delinquent by the Washington State Department of Revenue or if they are so listed, must submit a written copy of their payment plan approved by the Department of Revenue to the Contracting Agency within 2 business days following the bid opening.

2. Federal Debarment

A. Criterion: The Bidder shall not currently be debarred or suspended by the Federal government.

B. Documentation: The Bidder shall not be listed as having an "active exclusion" on the U.S. government's "System for Award Management" database (www.sam.gov).

3. Subcontractor Responsibility

A. Criterion: The Bidder's standard subcontract form shall include the subcontractor responsibility language required by RCW 39.06.020, and the Bidder shall have an established procedure which it utilizes to validate the responsibility of each of its subcontractors. The Bidder's subcontract form shall also include a requirement that each of its subcontractors shall have and document a similar procedure to determine whether the sub-tier subcontractors with whom it contracts are also "responsible" subcontractors as defined by RCW 39.06.020.

B. Documentation: The Bidder, if and when required as detailed below, shall submit a copy of its standard subcontract form for review by the Contracting Agency, and a written description of its procedure for validating the responsibility of subcontractors with which it contracts.

4. Prevailing Wages

A. Criterion: The Bidder shall not have a record of prevailing wage violations as determined by WA Labor & Industries in the five years prior to the bid submittal date, that demonstrates a pattern of failing to pay workers prevailing wages, unless there are extenuating circumstances and such circumstances are deemed acceptable to the Contracting Agency.

B. Documentation: The Bidder, if and when required as detailed below, shall submit a list of all prevailing wage violations in the five years prior to the bid submittal date, along with an explanation of each violation and how it was resolved. The Contracting Agency will evaluate these explanations and the resolution of each complaint to

determine whether the violation demonstrate a pattern of failing to pay its workers prevailing wages as required.

5. Claims Against Retainage and Bonds

A. Criterion: The Bidder shall not have a record of excessive claims filed against the retainage or payment bonds for public works projects in the three years prior to the bid submittal date, that demonstrate a lack of effective management by the Bidder of making timely and appropriate payments to its subcontractors, suppliers, and workers, unless there are extenuating circumstances and such circumstances are deemed acceptable to the Contracting Agency.

B. Documentation: The Bidder, if and when required as detailed below, shall submit a list of the public works projects completed in the three years prior to the bid submittal date that have had claims against retainage and bonds and include for each project the following information:

- Name of project
- The owner and contact information for the owner;
- A list of claims filed against the retainage and/or payment bond for any of the projects listed;
- A written explanation of the circumstances surrounding each claim and the ultimate resolution of the claim.

6. Public Bidding Crime

A. Criterion: The Bidder and/or its owners shall not have been convicted of a crime involving bidding on a public works contract in the five years prior to the bid submittal date.

B. Documentation: The Bidder, if and when required as detailed below, shall sign a statement (on a form to be provided by the Contracting Agency) that the Bidder and/or its owners have not been convicted of a crime involving bidding on a public works contract.

7. Termination for Cause / Termination for Default

A. Criterion: The Bidder shall not have had any public works contract terminated for cause or terminated for default by a government agency in the five years prior to the bid submittal date, unless there are extenuating circumstances and such circumstances are deemed acceptable to the Contracting Agency.

B. Documentation: The Bidder, if and when required as detailed below, shall sign a statement (on a form to be provided by the Contracting Agency) that the Bidder has not had any public works contract terminated for cause or terminated for default by a government agency in the five years prior to the bid submittal date; or if Bidder was terminated, describe the circumstances.

8. Lawsuits

A. Criterion: The Bidder shall not have lawsuits with judgments entered against the Bidder in the five years prior to the bid submittal date that demonstrate a pattern of failing to meet the terms of contracts, unless there are extenuating circumstances and such circumstances are deemed acceptable to the Contracting Agency.

B. Documentation: The Bidder, if and when required as detailed below, shall sign a statement (on a form to be provided by the Contracting Agency) that the Bidder has not had any lawsuits with judgments entered against the Bidder in the five years prior to the bid submittal date that demonstrate a pattern of failing to meet the terms of contracts, or shall submit a list of all lawsuits with judgments entered against the Bidder in the five years prior to the bid submittal date, along with a written explanation of the circumstances surrounding each such lawsuit. The Contracting Agency shall evaluate these explanations to determine whether the lawsuits demonstrate a pattern of failing to meet of terms of construction related contracts.

9. Contracting Agency Specific Criteria

A. Criterion:
Bidders shall supply the following information:

- Dollar amount of contracts currently held by the bidder
- List of more important construction projects completed by your company in the last 5 years.
- Bank References
- Bonding Company

B. Documentation:
The required information shall be included in Section C of the Bidder Responsibility Statement.

The Contracting Agency reserves the right to request additional documentation from all Bidders and to request further documentation as needed to assess Bidder responsibility. The Contracting Agency also reserves the right to obtain

information from third-parties and independent sources of information concerning a Bidder's compliance with the mandatory and supplemental criteria, and to use that information in their evaluation. The Contracting Agency may (but is not required to) consider mitigating factors in determining whether the Bidder complies with the requirements of the supplemental criteria.

The basis for evaluation of Bidder compliance with these mandatory and supplemental criteria shall include any documents or facts obtained by Contracting Agency (whether from the Bidder or third parties) including but not limited to: (i) financial, historical, or operational data from the Bidder; (ii) information obtained directly by the Contracting Agency from others for whom the Bidder has worked, or other public agencies or private enterprises; and (iii) any additional information obtained by the Contracting Agency which is believed to be relevant to the matter.

If the Contracting Agency determines the Bidder does not meet the bidder responsibility criteria above and is therefore not a responsible Bidder, the Contracting Agency shall notify the Bidder in writing, with the reasons for its determination. If the Bidder disagrees with this determination, it may appeal the determination within two (2) business days of the Contracting Agency's determination by presenting its appeal and any additional information to the Contracting Agency. The Contracting Agency will consider the appeal and any additional information before issuing its final determination. If the final determination affirms that the Bidder is not responsible, the Contracting Agency will not execute a contract with any other Bidder until at least two business days after the Bidder determined to be not responsible has received the Contracting Agency's final determination.

Request to Change Supplemental Bidder Responsibility Criteria Prior To Bid: Bidders with concerns about the relevancy or restrictiveness of the Supplemental Bidder Responsibility Criteria may make or submit requests to the Contracting Agency to modify the criteria. Such requests shall be in writing, describe the nature of the concerns, and propose specific modifications to the criteria. Bidders shall submit such requests to the Contracting Agency no later than five (5) business days prior to the bid submittal deadline and address the request to the Project Engineer or such other person designated by the Contracting Agency in the Bid Documents.

1-02.15 Pre-Award Information
(August 14, 2013 APWA GSP)

Revise this section to read:

Before awarding any contract, the Contracting Agency may require one or more of these items or actions of the apparent lowest responsible bidder:

1. A complete statement of the origin, composition, and manufacture of any or all materials to be used,
2. Samples of these materials for quality and fitness tests,
3. A progress schedule (in a form the Contracting Agency requires) showing the order of and time required for the various phases of the work,
4. A breakdown of costs assigned to any bid item,
5. Attendance at a conference with the Engineer or representatives of the Engineer,
6. Obtain, and furnish a copy of, a business license to do business in the city or county where the work is located.
7. Any other information or action taken that is deemed necessary to ensure that the bidder is the lowest responsible bidder.

1-03 Award and Execution of Contract

1-03.1 Consideration of Bids
(January 23, 2006 APWA GSP)

Revise the first paragraph to read:

After opening and reading proposals, the Contracting Agency will check them for correctness of extensions of the prices per unit and the total price. If a discrepancy exists between the price per unit and the extended amount of any bid item, the price per unit will control. If a minimum bid amount has been established for any item and the bidder's unit or lump sum price is less than the minimum specified amount, the Contracting Agency will unilaterally revise the unit or lump sum price, to the minimum specified amount and recalculate the extension. The total of extensions, corrected where necessary, including sales taxes where applicable and such additives and/or alternates as selected by the Contracting Agency, will be used by the Contracting Agency for award purposes and to fix the Awarded Contract Price amount and the amount of the contract bond.

1-03.3 Execution of Contract
(October 1, 2005 APWA GSP)

Revise this section to read:

Copies of the Contract Provisions, including the unsigned Form of Contract, will be available for signature by the successful bidder on the first business day following

award. The number of copies to be executed by the Contractor will be determined by the Contracting Agency.

Within 10 calendar days after the award date, the successful bidder shall return the signed Contracting Agency-prepared contract, an insurance certification as required by Section 1-07.18, and a satisfactory bond as required by law and Section 1-03.4. Before execution of the contract by the Contracting Agency, the successful bidder shall provide any pre-award information the Contracting Agency may require under Section 1-02.15.

Until the Contracting Agency executes a contract, no proposal shall bind the Contracting Agency nor shall any work begin within the project limits or within Contracting Agency-furnished sites. The Contractor shall bear all risks for any work begun outside such areas and for any materials ordered before the contract is executed by the Contracting Agency.

If the bidder experiences circumstances beyond their control that prevents return of the contract documents within the calendar days after the award date stated above, the Contracting Agency may grant up to a maximum of 10 additional calendar days for return of the documents, provided the Contracting Agency deems the circumstances warrant it.

1-03.4 Contract Bond
(July 23, 2015 APWA GSP)

Delete the first paragraph and replace it with the following:

The successful bidder shall provide executed payment and performance bond(s) for the full contract amount. The bond may be a combined payment and performance bond; or be separate payment and performance bonds. In the case of separate payment and performance bonds, each shall be for the full contract amount. The bond(s) shall:

1. Be on Contracting Agency-furnished form(s);
2. Be signed by an approved surety (or sureties) that:
   a. Is registered with the Washington State Insurance Commissioner, and
   b. Appears on the current Authorized Insurance List in the State of Washington published by the Office of the Insurance Commissioner,
3. Guarantee that the Contractor will perform and comply with all obligations, duties, and conditions under the Contract, including but not limited to the duty and obligation to indemnify, defend, and protect the Contracting Agency against all losses and claims related directly or indirectly from any failure:
   a. Of the Contractor (or any of the employees, subcontractors, or lower tier subcontractors of the Contractor) to faithfully perform and comply with all contract obligations, conditions, and duties, or

b. Of the Contractor (or the subcontractors or lower tier subcontractors of the Contractor) to pay all laborers, mechanics, subcontractors, lower tier subcontractors, material person, or any other person who provides supplies or provisions for carrying out the work;

4. Be conditioned upon the payment of taxes, increases, and penalties incurred on the project under titles 50, 51, and 82 RCW; and
5. Be accompanied by a power of attorney for the Surety's officer empowered to sign the bond; and
6. Be signed by an officer of the Contractor empowered to sign official statements (sole proprietor or partner). If the Contractor is a corporation, the bond(s) must be signed by the president or vice president, unless accompanied by written proof of the authority of the individual signing the bond(s) to bind the corporation (i.e., corporate resolution, power of attorney, or a letter to such effect signed by the president or vice president).

1-03.7 Judicial Review

(July 23, 2015 APWA GSP)

Revise this section to read:

Any decision made by the Contracting Agency regarding the Award and execution of the Contract or Bid rejection shall be conclusive subject to the scope of judicial review permitted under Washington Law. Such review, if any, shall be timely filed in the Superior Court of the county where the Contracting Agency headquarters is located, provided that where an action is asserted against a county, RCW 36.01.05 shall control venue and jurisdiction.

1-04 Scope of the Work

1-04.2 Coordination of Contract Documents, Plans, Special Provisions, Specifications, and Addenda

(March 13, 2012 APWA GSP)

Revise the second paragraph to read:

Any inconsistency in the parts of the contract shall be resolved by following this order of precedence (e.g., 1 presiding over 2, 2 over 3, 3 over 4, and so forth):

1. Addenda,
2. Proposal Form,
3. Special Provisions,
4. Contract Plans,
5. Amendments to the Standard Specifications,
6. Standard Specifications,
7. Contracting Agency's Standard Plans or Details (if any), and
8. WSDOT Standard Plans for Road, Bridge, and Municipal Construction.

1-04.6 Variation in Estimated Quantities

Supplement this Section with the following:

The quantities for Unsuitable Foundation Excavation Incl. Haul and Gravel Borrow Incl. Haul have been entered into the Proposal only to provide a common proposal for bidders. Actual quantities will be determined in the field as the work progresses, and will be paid at the original bid price, regardless of final quantity. These bid items shall not be subject to the provisions of 1-04.6 of the Standard Specifications.

1-05 Control of Work

1-05.3 Working Drawings

Supplement this section with the following:

The County will provide the contractor with hard copies and electronic (CAD) versions of the engineering Plans to use as a basis for the record Plans. The contractor is responsible for filling out the information on the record Plans.

Record Plans shall show the size and location of construction limits and features. All record drawing information shall be shown in station, offset and elevation. The Plans shall also show the size, type and composition of the features as appropriate.

These plans shall be kept current during the course of construction, kept on-site at the contractor's site office, and be available for review by the engineer at all times. Record Plans shall be updated daily and changes occurring on any day shall be entered on the record Plans by noon on the next working day.
Prior to acceptance of the completed project, the contractor shall furnish the engineer one legible and neatly marked set of full-sized plans. All record Plans and disks shall be delivered to the Engineer in acceptable form prior to final payment.

The production of record Plans shall be considered incidental to and included in the cost for other items in the contract. A pay submittal shall not be considered complete or payable if the record Plans are not current as required by this section.

1-05.4 Conformity With and Deviations From Plans and Stakes

Supplement this section with the following:

Copies of the Contracting Agency provided primary survey control data are shown on the Plans. The Contractor shall provide all surveying required to complete the project. The Contractor shall be responsible for setting, maintaining, and resetting all stakes for the Work. Except for the survey control data to be furnished by the Contracting Agency, calculations, surveying, and measuring required for setting and maintaining the necessary lines and grades shall be the Contractor's responsibility.

At the Contractor's request the Contracting Agency will provide the electronic CAD base files. Electronic files are provided for the Contractor's convenience and are not part of the Contract. Calculations shall be made from the Plans. The Contractor is advised to field verify the electronic files prior to their use in staking or other activities. If the signed and stamped Plans and electronic files differ, the signed and stamped Plans control. The Contractor shall not rely on the electronic files and no claim by the Contractor shall be based on the electronic files or any difference between the electronic files and the signed and stamped Plans or site conditions.

Payment

Payment will be made in accordance with Section 1-04.1 for the following bid item, when included in the proposal:

"Project Surveying", per Lump Sum.

The unit contract price for "Project Surveying", by Lump Sum, shall be full pay for all labor, equipment, materials, and supervision utilized to perform the Work specified, including any resurveying, checking, correction of errors, replacement of missing or damaged stakes, and coordination efforts as described above, as shown on the Plans, and herein specified.

1-05.7 Removal of Defective and Unauthorized Work

(October 1, 2005 APWA GSP)

Supplement this section with the following:

If the Contractor fails to remedy defective or unauthorized work within the time specified in a written notice from the Engineer, or fails to perform any part of the work required by the Contract Documents, the Engineer may correct and remedy such work as may be identified in the written notice, with Contracting Agency forces or by such other means as the Contracting Agency may deem necessary.

If the Contractor fails to comply with a written order to remedy what the Engineer determines to be an emergency situation, the Engineer may have the defective and unauthorized work corrected immediately, have the rejected work removed and replaced, or have work the Contractor refuses to perform completed by using Contracting Agency or other forces. An emergency situation is any situation when, in the opinion of the Engineer, a delay in its remedy could be potentially unsafe, or might cause serious risk of loss or damage to the public.

Direct or indirect costs incurred by the Contracting Agency attributable to correcting and remedying defective or unauthorized work, or work the Contractor failed or refused to perform, shall be paid by the Contractor. Payment will be deducted by the Engineer from monies due, or to become due, the Contractor. Such direct and indirect costs shall include in particular, but without limitation, compensation for additional professional services required, and costs for repair and replacement of work of others destroyed or damaged by correction, removal, or replacement of the Contractor's unauthorized work.

No adjustment in contract time or compensation will be allowed because of the delay in the performance of the work attributable to the exercise of the Contracting Agency's rights provided by this Section.

The rights exercised under the provisions of this section shall not diminish the Contracting Agency's right to pursue any other avenue for additional remedy or damages with respect to the Contractor's failure to perform the work as required.

1-05.11 Final Inspection

Delete this section and replace it with the following:

1-05.11 Final Inspections and Operational Testing

1-05.11(1) Substantial Completion Date

This project shall be physically completed within **30 working days**.

When the Contractor considers the work to be substantially complete, the Contractor shall so notify the Engineer and request the Engineer establish the Substantial Completion Date. The Contractor's request shall list the specific items of work that remain to be completed in order to reach physical completion. The Engineer will schedule an inspection of the work with the Contractor to determine the status of completion. The Engineer may also establish the Substantial Completion Date unilaterally.

If, after this inspection, the Engineer concurs with the Contractor that the work is substantially complete and ready for its intended use, the Engineer, by written notice to the Contractor, will set the Substantial Completion Date. If, after this inspection the Engineer does not consider the work substantially complete and ready for its intended use, the Engineer will, by written notice, so notify the Contractor giving the reasons therefor.

Upon receipt of written notice concurring in or denying substantial completion, whichever is applicable, the Contractor shall pursue vigorously, diligently and without unauthorized interruption, the work necessary to reach Substantial and Physical Completion. The Contractor shall provide the Engineer with a revised schedule indicating when the Contractor expects to reach substantial and physical completion of the work.

The above process shall be repeated until the Engineer establishes the Substantial Completion Date and the Contractor considers the work physically complete and ready for final inspection.

1-05.11(2) Final Inspection and Physical Completion Date

When the Contractor considers the work physically complete and ready for final inspection, the Contractor by written notice, shall request the Engineer to schedule a final inspection. The Engineer will set a date for final inspection. The Engineer and the Contractor will then make a final inspection and the Engineer will notify the Contractor in writing of all particulars in which the final inspection reveals the work incomplete or unacceptable. The Contractor shall immediately take such corrective measures as are necessary to remedy the listed deficiencies. Corrective work shall be pursued vigorously, diligently, and without interruption until physical completion of the listed deficiencies. This process will continue until the Engineer is satisfied the listed deficiencies have been corrected.

If action to correct the listed deficiencies is not initiated within 7 days after receipt of the written notice listing the deficiencies, the Engineer may, upon written notice to the Contractor, take whatever steps are necessary to correct those deficiencies pursuant to Section 1-05.7.

The Contractor will not be allowed an extension of contract time because of a delay in the performance of the work attributable to the exercise of the Engineer's right hereunder.

Upon correction of all deficiencies, the Engineer will notify the Contractor and the Contracting Agency, in writing, of the date upon which the work was considered physically complete. That date shall constitute the Physical Completion Date of the contract, but shall not imply acceptance of the work or that all the obligations of the Contractor under the contract have been fulfilled.

1-05.11(3) Operational Testing

It is the intent of the Contracting Agency to have at the Physical Completion Date a complete and operable system. Therefore when the work involves the installation of machinery or other mechanical equipment; street lighting, electrical distribution or signal systems; irrigation systems; buildings; or other similar work it may be desirable for the Engineer to have the Contractor operate and test the work for a period of time

after final inspection but prior to the physical completion date. Whenever items of work are listed in the Contract Provisions for operational testing they shall be fully tested under operating conditions for the time period specified to ensure their acceptability prior to the Physical Completion Date. During and following the test period, the Contractor shall correct any items of workmanship, materials, or equipment which prove faulty, or that are not in first class operating condition. Equipment, electrical controls, meters, or other devices and equipment to be tested during this period shall be tested under the observation of the Engineer, so that the Engineer may determine their suitability for the purpose for which they were installed. The Physical Completion Date cannot be established until testing and corrections have been completed to the satisfaction of the Engineer.

The costs for power, gas, labor, material, supplies, and everything else needed to successfully complete operational testing, shall be included in the unit contract prices related to the system being tested, unless specifically set forth otherwise in the proposal.

Operational and test periods, when required by the Engineer, shall not affect a manufacturer's guaranties or warranties furnished under the terms of the contract.

1-05.13 Superintendents, Labor, and Equipment of Contractor

(August 14, 2013 APWA GSP)

Delete the sixth and seventh paragraphs of this section.

1-05.14 Cooperation with Other Contractors

Supplement this section with the following:

The Contractor shall be responsible for the coordination of his work with the work of others, including the work in the vicinity of this project by other contractors. The Owner will not be responsible for any damage suffered or extra costs incurred by the Contractor resulting directly or indirectly from any other contract(s) or work.

1-05.15 Method of Serving Notices

(March 25, 2009 APWA GSP)
Revise the second paragraph to read:

All correspondence from the Contractor shall be directed to the Project Engineer. All correspondence from the Contractor constituting any notification, notice of protest, notice of dispute, or other correspondence constituting notification required to be furnished under the Contract, must be in paper format, hand delivered or sent via mail delivery service to the Project Engineer's office. Electronic copies such as e-mails or electronically delivered copies of correspondence will not constitute such notice and will not comply with the requirements of the Contract.

Add the following new sections:

1-05.16 Water and Power
(October 1, 2005 APWA GSP)

The Contractor shall make necessary arrangements, and shall bear the costs for power and water necessary for the performance of the work, unless the contract includes power and water as a pay item.

1-05.17 Oral Agreements

No oral agreement or conversation with any officer, agent, or employee of the Contracting Agency, either before or after execution of the contract, shall affect or modify any of the terms or obligations contained in any of the documents comprising the contract. Such oral agreement or conversation shall be considered as unofficial information and in no way binding upon the Contracting Agency, unless subsequently put in writing and signed by the Contracting Agency.

1-07 Legal Regulations and Responsibilities to the Public

1-07.1 Laws to be Observed
(October 1, 2005 APWA GSP)

Supplement this section with the following:

In cases of conflict between different safety regulations, the more stringent regulation shall apply.

The Washington State Department of Labor and Industries shall be the sole and paramount administrative agency responsible for the administration of the provisions of the Washington Industrial Safety and Health Act of 1973 (WISHA).

The Contractor shall maintain at the project site office, or other well known place at the project site, all articles necessary for providing first aid to the injured. The Contractor shall establish, publish, and make known to all employees, procedures for ensuring immediate removal to a hospital, or doctor's care, persons, including employees, who may have been injured on the project site. Employees should not be permitted to work on the project site before the Contractor has established and made known procedures for removal of injured persons to a hospital or a doctor's care.

The Contractor shall have sole responsibility for the safety, efficiency, and adequacy of the Contractor's plant, appliances, and methods, and for any damage or injury resulting from their failure, or improper maintenance, use, or operation. The Contractor

shall be solely and completely responsible for the conditions of the project site, including safety for all persons and property in the performance of the work. This requirement shall apply continuously, and not be limited to normal working hours. The required or implied duty of the Engineer to conduct construction review of the Contractor's performance does not, and shall not, be intended to include review and adequacy of the Contractor's safety measures in, on, or near the project site.

1-07.2 State Taxes

Delete this section, including its sub-sections, in its entirety and replace it with the following:

1-07.2 State Sales Tax

(June 27, 2011 APWA GSP)

The Washington State Department of Revenue has issued special rules on the State sales tax. Sections 1-07.2(1) through 1-07.2(3) are meant to clarify those rules. The Contractor should contact the Washington State Department of Revenue for answers to questions in this area. The Contracting Agency will not adjust its payment if the Contractor bases a bid on a misunderstood tax liability.

The Contractor shall include all Contractor-paid taxes in the unit bid prices or other contract amounts. In some cases, however, state retail sales tax will not be included. Section 1-07.2(2) describes this exception.

The Contracting Agency will pay the retained percentage (or release the Contract Bond if a FHWA-funded Project) only if the Contractor has obtained from the Washington State Department of Revenue a certificate showing that all contract-related taxes have been paid (RCW 60.28.051). The Contracting Agency may deduct from its payments to the Contractor any amount the Contractor may owe the Washington State Department of Revenue, whether the amount owed relates to this contract or not. Any amount so deducted will be paid into the proper State fund.

1-07.2(1) State Sales Tax - Rule 171

WAC 458-20-171, and its related rules, apply to building, repairing, or improving streets, roads, etc., which are owned by a municipal corporation, or political subdivision of the state, or by the United States, and which are used primarily for foot or vehicular traffic. This includes storm or combined sewer systems within and included as a part of the street or road drainage system and power lines when such are part of the roadway lighting system. For work performed in such cases, the Contractor shall include Washington State Retail Sales Taxes in the various unit bid item prices, or other contract amounts, including those that the Contractor pays on the purchase of the materials, equipment, or supplies used or consumed in doing the work.

1-07.2(2) State Sales Tax - Rule 170

WAC 458-20-170, and its related rules, apply to the constructing and repairing of new or existing buildings, or other structures, upon real property. This includes, but is not limited to, the construction of streets, roads, highways, etc., owned by the state of Washington; water mains and their appurtenances; sanitary sewers and sewage disposal systems unless such sewers and disposal systems are within, and a part of, a street or road drainage system; telephone, telegraph, electrical power distribution lines, or other conduits or lines in or above streets or roads, unless such power lines become a part of a street or road lighting system; and installing or attaching of any article of tangible personal property in or to real property, whether or not such personal property becomes a part of the realty by virtue of installation.

For work performed in such cases, the Contractor shall collect from the Contracting Agency, retail sales tax on the full contract price. The Contracting Agency will automatically add this sales tax to each payment to the Contractor. For this reason, the Contractor shall not include the retail sales tax in the unit bid item prices, or in any other contract amount subject to Rule 170, with the following exception.

Exception: The Contracting Agency will not add in sales tax for a payment the Contractor or a subcontractor makes on the purchase or rental of tools, machinery, equipment, or consumable supplies not integrated into the project. Such sales taxes shall be included in the unit bid item prices or in any other contract amount.

1-07.2(3) Services

The Contractor shall not collect retail sales tax from the Contracting Agency on any contract wholly for professional or other services (as defined in Washington State Department of Revenue Rules 138 and 244).

1-07.6 Permits and Licenses

Supplement this section with the following:

The Contracting Agency has obtained the below-listed permit(s) for this project. A copy of the permit(s) is attached as an appendix for informational purposes. All contacts with the permitting agency concerning the below-listed permit(s) shall be through the Engineer. The Contractor shall obtain additional permits as necessary, including a Right-of-Way permit from Kitsap County Public Works. All costs to obtain and comply with additional permits shall be included in the applicable bid items for the work involved. Copies of these permits are required to be onsite at all times.

NAME OF DOCUMENT	PERMITTING AGENCY	PERMIT REFERENCE #
Building Permit	Kitsap Co. DCD	<in process>
Building Clearance	Kitsap Public Health District.	319279

1-07.7 Load Limits

Supplement this section with the following:

If the sources of materials provided by the Contractor necessitates hauling over roads other than county roads, the Contractor shall, at the Contractor's expense, make all arrangements for the use of the haul routes.

1-07.9 Wages

1-07.9(1) General

Supplement this section with the following:

This contract is subject to the minimum wage requirements of RCW39.12. The schedule of the prevailing wage rates for this Contract is included in the Appendix.

1-07.17 Utilities and Similar Facilities

Delete the first paragraph of this section and replace it with the following:

The Contractor shall protect all private and public utilities from damage resulting from the work to be accomplished under this contract and provide the support necessary to keep any facility encountered during construction intact and fully functional. Among others these utilities include: telephone, cable television and power lines; pipelines and water lines; railroad tracks and equipment; road and highway lighting and sign systems and intelligent transportation systems (ITS)

Supplement this section with the following:

Locations and dimensions shown in the Plans for existing facilities are in accordance with available information obtained without uncovering, measuring, or other verification.

The Contractor shall attend a mandatory utility preconstruction meeting with the Engineer, all affected Subcontractors, and all utility owners and their Contractors prior to beginning on-site work.

The following addresses and telephone numbers of utility companies or their Contractors that will be adjusting, relocating, replacing, or constructing utilities within the project limits are supplied for the Contractor's use:

Puget Sound Energy
6522 Kitsap Way
Bremerton, WA 98312
Contact: Tom Brobst
Telephone: 360.475.7020

CenturyLink
8102 Skansie Drive
Gig Harbor, WA 98332
Contact: Robin Scott
Telephone: 253.851.1260

Comcast
1225 Sylvan Way
Bremerton, WA 98310
Contact: Jim Lecompte
Telephone: 253.896.5688, 360.340.1288

Kitsap Public Utility District
1431 NW Finn Hill Rd.
Poulsbo, WA 98370
Contact: Daniel Kimbler
Telephone: 360.626.7707

Add the following new section:

1-07.17(3) Protection and Support of Existing Utilities

Description

The Contractor shall provide protection of all existing utility facilities nearby or crossing the work area during construction. All Utilities shall remain fully operational throughout the life of this contract unless otherwise stated in these provisions.

The Contractor shall locate, "pot hole," and expose all existing underground utilities potentially affected by the work whether shown in the Plans or not. Utility location shall be accomplished by contacting the Utilities Underground Location Center and the affected utility providers as needed to accurately locate underground utilities. Utilities located outside of the public right-of-way may require location using a private utility locating contractor. Excavation immediately adjacent to existing utilities including conduits shall be by hand methods in compliance with Washington State requirements.

Payment
Payment will be made in accordance with Section 1-04.1 for the following bid item included on the proposal:

"Protection of Existing Utilities Incl. Pot Holing", lump sum.

The lump sum contract price for "Protection of Existing Utilities Incl. Pot Holing" shall be full pay for all labor, tools, materials and equipment necessary to complete the work, including potholing and for any costs incurred by the Contractor due to the loss of work efficiency as a result of coordinating utility relocation by others or the requirement to work adjacent to relocated or temporarily supported utilities.

1-07.18 Public Liability and Property Damage Insurance

Delete this section in its entirety, and replace it with the following:

1-07.18 Insurance
(January 4, 2016 APWA GSP)

1-07.18(1) General Requirements

A. The Contractor shall procure and maintain the insurance described in all subsections of section 1-07.18 of these Special Provisions, from insurers with a current A. M. Best rating of not less than A-: VII and licensed to do business in the State of Washington. The Contracting Agency reserves the right to approve or reject the insurance provided, based on the insurer's financial condition.

B. The Contractor shall keep this insurance in force without interruption from the commencement of the Contractor's Work through the term of the Contract and for thirty (30) days after the Physical Completion date, unless otherwise indicated below.

C. If any insurance policy is written on a claims made form, its retroactive date, and that of all subsequent renewals, shall be no later than the effective date of this Contract. The policy shall state that coverage is claims made, and state the retroactive date. Claims-made form coverage shall be maintained by the Contractor for a minimum of 36 months following the Completion Date or earlier termination of this Contract, and the Contractor shall annually provide the Contracting Agency with proof of renewal. If renewal of the claims made form of coverage becomes unavailable, or economically prohibitive, the Contractor shall purchase an extended reporting period ("tail") or execute another form of guarantee acceptable to the Contracting Agency to assure financial responsibility for liability for services performed.

D. The Contractor's Automobile Liability, Commercial General Liability and Excess or Umbrella Liability insurance policies shall be primary and non-contributory insurance as respects the Contracting Agency's insurance, self-insurance, or self-insured pool coverage. Any insurance, self-insurance, or self-insured pool coverage maintained by the Contracting Agency shall be excess of the Contractor's insurance and shall not contribute with it.

E. The Contractor shall provide the Contracting Agency and all additional insureds with written notice of any policy cancellation, within two business days of their receipt of such notice.

G. The Contractor shall not begin work under the Contract until the required insurance has been obtained and approved by the Contracting Agency

H. Failure on the part of the Contractor to maintain the insurance as required shall constitute a material breach of contract, upon which the Contracting Agency may, after giving five business days' notice to the Contractor to correct the breach, immediately terminate the Contract or, at its discretion, procure or renew such insurance and pay any and all premiums in connection therewith, with any sums so expended to be repaid to the Contracting Agency on demand, or at the sole discretion of the Contracting Agency, offset against funds due the Contractor from the Contracting Agency.

I. All costs for insurance shall be incidental to and included in the unit or lump sum prices of the Contract and no additional payment will be made.

1-07.18(2) Additional Insured

All insurance policies, with the exception of Workers Compensation, and of Professional Liability and Builder's Risk (if required by this Contract) shall name the following listed entities as additional insured(s) using the forms or endorsements required herein:

the Contracting Agency and its officers, elected officials, employees, agents, and volunteers

The above-listed entities shall be additional insured(s) for the full available limits of liability maintained by the Contractor, irrespective of whether such limits maintained by the Contractor are greater than those required by this Contract, and irrespective of whether the Certificate of Insurance provided by the Contractor pursuant to 1-07.18(4) describes limits lower than those maintained by the Contractor.

For Commercial General Liability insurance coverage, the required additional insured endorsements shall be at least as broad as ISO forms CG 20 10 10 01 for ongoing operations and CG 20 37 10 01 for completed operations.

1-07.18(3) Subcontractors

The Contractor shall cause each Subcontractor of every tier to provide insurance coverage that complies with all applicable requirements of the Contractor-provided insurance as set forth herein, except the Contractor shall have sole responsibility for determining the limits of coverage required to be obtained by Subcontractors.

The Contractor shall ensure that all Subcontractors of every tier add all entities listed in 1-07.18(2) as additional insureds, and provide proof of such on the policies as required by that section as detailed in 1-07.18(2) using an endorsement as least as broad as ISO CG 20 10 10 01 for ongoing operations and CG 20 37 10 01 for completed operations.

Upon request by the Contracting Agency, the Contractor shall forward to the Contracting Agency evidence of insurance and copies of the additional insured endorsements of each Subcontractor of every tier as required in 1-07.18(4) Verification of Coverage.

1-07.18(4) Verification of Coverage

The Contractor shall deliver to the Contracting Agency a Certificate(s) of Insurance and endorsements for each policy of insurance meeting the requirements set forth herein when the Contractor delivers the signed Contract for the work. Failure of Contracting Agency to demand such verification of coverage with these insurance requirements or failure of Contracting Agency to identify a deficiency from the insurance documentation provided shall not be construed as a waiver of Contractor's obligation to maintain such insurance.

Verification of coverage shall include:

1. An ACORD certificate or a form determined by the Contracting Agency to be equivalent.
2. Copies of all endorsements naming Contracting Agency and all other entities listed in 1-07.18(2) as additional insured(s), showing the policy number. The Contractor may submit a copy of any blanket additional insured clause from its policies instead of a separate endorsement.
3. Any other amendatory endorsements to show the coverage required herein.
4. A notation of coverage enhancements on the Certificate of Insurance shall not satisfy these requirements – actual endorsements must be submitted.

Upon request by the Contracting Agency, the Contractor shall forward to the Contracting Agency a full and certified copy of the insurance policy(s). If Builders Risk

insurance is required on this Project, a full and certified copy of that policy is required when the Contractor delivers the signed Contract for the work.

1-07.18(5) Coverages and Limits

The insurance shall provide the minimum coverages and limits set forth below. Contractor's maintenance of insurance, its scope of coverage, and limits as required herein shall not be construed to limit the liability of the Contractor to the coverage provided by such insurance, or otherwise limit the Contracting Agency's recourse to any remedy available at law or in equity.

All deductibles and self-insured retentions must be disclosed and are subject to approval by the Contracting Agency. The cost of any claim payments falling within the deductible or self-insured retention shall be the responsibility of the Contractor. In the event an additional insured incurs a liability subject to any policy's deductibles or self-insured retention, said deductibles or self-insured retention shall be the responsibility of the Contractor.

1-07.18(5)A Commercial General Liability

Commercial General Liability insurance shall be written on coverage forms at least as broad as ISO occurrence form CG 00 01, including but not limited to liability arising from premises, operations, stop gap liability, independent contractors, products-completed operations, personal and advertising injury, and liability assumed under an insured contract. There shall be no exclusion for liability arising from explosion, collapse or underground property damage.

The Commercial General Liability insurance shall be endorsed to provide a per project general aggregate limit, using ISO form CG 25 03 05 09 or an equivalent endorsement.

Contractor shall maintain Commercial General Liability Insurance arising out of the Contractor's completed operations for at least three years following Substantial Completion of the Work.

Such policy must provide the following minimum limits:

$1,000,000	Each Occurrence
$2,000,000	General Aggregate
$2,000,000	Products & Completed Operations Aggregate
$1,000,000	Personal & Advertising Injury each offence
$1,000,000	Stop Gap / Employers' Liability each accident

1-07.18(5)B Automobile Liability

Automobile Liability shall cover owned, non-owned, hired, and leased vehicles; and shall be written on a coverage form at least as broad as ISO form CA 00 01. If the work involves the transport of pollutants, the automobile liability policy shall include MCS 90 and CA 99 48 endorsements.

Such policy must provide the following minimum limit:

$1,000,000 Combined single limit each accident

1-07.18(5)C Workers' Compensation

The Contractor shall comply with Workers' Compensation coverage as required by the Industrial Insurance laws of the State of Washington.

1-07.23 Public Convenience and Safety

1-07.23(1) Construction Under Traffic

Section 1-07.23(1) is supplemented with the following

The Contractor shall maintain safe pedestrian passage through the work area at all times.

(January 2, 2012 WSDOT GSP, Option 2)
Work Zone Clear Zone
The Work Zone Clear Zone (WZCZ) applies during working and nonworking hours. The WZCZ applies only to temporary roadside objects introduced by the Contractor's operations and does not apply to preexisting conditions or permanent Work. Those work operations that are actively in progress shall be in accordance with adopted and approved Traffic Control Plans, and other contract requirements.

During nonworking hours equipment or materials shall not be within the WZCZ unless they are protected by permanent guardrail or temporary concrete barrier. The use of temporary concrete barrier shall be permitted only if the Engineer approves the installation and location.

During actual hours of work, unless protected as described above, only materials absolutely necessary to construction shall be within the WZCZ and only construction vehicles absolutely necessary to construction shall be allowed within the WZCZ or allowed to stop or park on the shoulder of the roadway.

The Contractor's nonessential vehicles and employees private vehicles shall not be permitted to park within the WZCZ at any time unless protected as described above.

Deviation from the above requirements shall not occur unless the Contractor has requested the deviation in writing and the Engineer has provided written approval.

Minimum WZCZ distances are measured from the edge of traveled way and will be determined as follows:

Regulatory Posted Speed	Distance From Traveled Way (Feet)
35 mph or less	10 *
40 mph	15
45 to 55 mph	20
60 mph or greater	30

* or 2-feet beyond the outside edge of sidewalk

Minimum Work Zone Clear Zone Distance

1-08 Prosecution and Progress

Add the following new section:

1-08.0 Preliminary Matters

(May 25, 2006 APWA GSP)

Add the following new section:

1-08.0(1) Preconstruction Conference

(October 10, 2008 APWA GSP)

Prior to the Contractor beginning the work, a preconstruction conference will be held between the Contractor, the Engineer, and such other interested parties as may be invited. The purpose of the preconstruction conference will be:

1. To review the initial progress schedule;
2. To establish a working understanding among the various parties associated or affected by the work;
3. To establish and review procedures for progress payment, notifications, approvals, submittals, etc.;
4. To establish normal working hours for the work;
5. To review safety standards and traffic control; and
6. To discuss such other related items as may be pertinent to the work.

The Contractor shall prepare and submit at the preconstruction conference the following:

1. A breakdown of all lump sum items;
2. A preliminary schedule of working drawing submittals; and
3. A list of material sources for approval if applicable.

Add the following new section:

1-08.0(2) Hours of Work
(December 8, 2014 APWA GSP)

Except in the case of emergency or unless otherwise approved by the Engineer, the normal working hours for the Contract shall be any consecutive 8-hour period between 7:00 a.m. and 6:00 p.m. Monday through Friday, exclusive of a lunch break. If the Contractor desires different than the normal working hours stated above, the request must be submitted in writing prior to the preconstruction conference, subject to the provisions below. The working hours for the Contract shall be established at or prior to the preconstruction conference.

All working hours and days are also subject to local permit and ordinance conditions (such as noise ordinances).

If the Contractor wishes to deviate from the established working hours, the Contractor shall submit a written request to the Engineer for consideration. This request shall state what hours are being requested, and why. Requests shall be submitted for review no later than 2 working days prior to the day(s) the Contractor is requesting to change the hours.

If the Contracting Agency approves such a deviation, such approval may be subject to certain other conditions, which will be detailed in writing. For example:

1. On non-Federal aid projects, requiring the Contractor to reimburse the Contracting Agency for the costs in excess of straight-time costs for Contracting Agency representatives who worked during such times. (The Engineer may require designated representatives to be present during the work. Representatives who may be deemed necessary by the Engineer include, but are not limited to: survey crews; personnel from the Contracting Agency's material testing lab; inspectors; and other Contracting Agency employees or third party consultants when, in the opinion of the Engineer, such work necessitates their presence.)
2. Considering the work performed on Saturdays, Sundays, and holidays as working days with regard to the contract time.
3. Considering multiple work shifts as multiple working days with respect to contract time even though the multiple shifts occur in a single 24-hour period.

4. If a 4-10 work schedule is requested and approved the non working day for the week will be charged as a working day.
5. If Davis Bacon wage rates apply to this Contract, all requirements must be met and recorded properly on certified payroll

1-08.3 Progress Schedule

1-08.3(2) Progress Schedule Types

1-08.3(2)B Type B Progress Schedule
(March 13, 2012 APWA GSP)

Revise the first paragraph to read:

The Contractor shall submit a preliminary Type B Progress Schedule at or prior to the preconstruction conference. The preliminary Type B Progress Schedule shall comply with all of these requirements and the requirements of Section 1-08.3(1), except that it may be limited to only those activities occurring within the first 60-working days of the project.

Revise the first sentence of the second paragraph to read:

The Contractor shall submit one copy in an electronic format of a Type B Progress Schedule depicting the entire project no later than 21-calendar days after the preconstruction conference.

1-08.4 Prosecution of Work

Delete this section in its entirety, and replace it with the following:

1-08.4 Notice to Proceed and Prosecution of Work
(July 23, 2015 APWA GSP)

Notice to Proceed will be given after the contract has been executed and the contract bond and evidence of insurance have been approved and filed by the Contracting Agency. The Contractor shall not commence with the work until the Notice to Proceed has been given by the Engineer. The Contractor shall commence construction activities on the project site within ten days of the Notice to Proceed Date, unless otherwise approved in writing. The Contractor shall diligently pursue the work to the physical completion date within the time specified in the contract. Voluntary shutdown or slowing of operations by the Contractor shall not relieve the Contractor of the responsibility to complete the work within the time(s) specified in the contract.

When shown in the Plans, the first order of work shall be the installation of high visibility fencing to delineate all areas for protection or restoration, as described in the

Contract. Installation of high visibility fencing adjacent to the roadway shall occur after the placement of all necessary signs and traffic control devices in accordance with 1-10.1(2). Upon construction of the fencing, the Contractor shall request the Engineer to inspect the fence. No other work shall be performed on the site until the Contracting Agency has accepted the installation of high visibility fencing, as described in the Contract.

1-08.5 Time for Completion
(August 14, 2013 APWA GSP, Option A)

Revise the third and fourth paragraphs to read:

Contract time shall begin on the first working day following the Notice to Proceed Date.

Each working day shall be charged to the contract as it occurs, until the contract work is physically complete. If substantial completion has been granted and all the authorized working days have been used, charging of working days will cease. Each week the Engineer will provide the Contractor a statement that shows the number of working days: (1) charged to the contract the week before; (2) specified for the physical completion of the contract; and (3) remaining for the physical completion of the contract. The statement will also show the nonworking days and any partial or whole day the Engineer declares as unworkable. Within 10 calendar days after the date of each statement, the Contractor shall file a written protest of any alleged discrepancies in it. To be considered by the Engineer, the protest shall be in sufficient detail to enable the Engineer to ascertain the basis and amount of time disputed. By not filing such detailed protest in that period, the Contractor shall be deemed as having accepted the statement as correct. If the Contractor is approved to work 10 hours a day and 4 days a week (a 4-10 schedule) and the fifth day of the week in which a 4-10 shift is worked would ordinarily be charged as a working day then the fifth day of that week will be charged as a working day whether or not the Contractor works on that day.

Revise the sixth paragraph to read:

The Engineer will give the Contractor written notice of the completion date of the contract after all the Contractor's obligations under the contract have been performed by the Contractor. The following events must occur before the Completion Date can be established:

1. The physical work on the project must be complete; and

2. The Contractor must furnish all documentation required by the contract and required by law, to allow the Contracting Agency to process final acceptance of the contract. The following documents must be received by the Project Engineer prior to establishing a completion date:

    a. Certified Payrolls (per Section 1-07.9[5]).
    b. Material Acceptance Certification Documents

c. Quarterly Reports of Amounts Credited as DBE Participation, as required by the Contract Provisions.
d. Final Contract Voucher Certification
e. Copies of the approved "Affidavit of Prevailing Wages Paid" for the Contractor and all Subcontractors
f. Property owner releases per Section 1-07.24.

(March 13, 1995 WSDOT GSP, Option 7)
Section 1-08.5 is supplemented with the following:

This project shall be physically completed within *** **30*** working days**.

1-08.9 Liquidated Damages
(August 14, 2013 APWA GSP)

Revise the fourth paragraph to read:

When the Contract Work has progressed to Substantial Completion as defined in the Contract, the Engineer may determine that the work is Substantially Complete. The Engineer will notify the Contractor in writing of the Substantial Completion Date. For overruns in Contract time occurring after the date so established, the formula for liquidated damages shown above will not apply. For overruns in Contract time occurring after the Substantial Completion Date, liquidated damages shall be assessed on the basis of direct engineering and related costs assignable to the project until the actual Physical Completion Date of all the Contract Work. The Contractor shall complete the remaining Work as promptly as possible. Upon request by the Project Engineer, the Contractor shall furnish a written schedule for completing the physical Work on the Contract.

1-09 Measurement and Payment

1-09.2 Weighting Equipment

1-09.2(1) General Requirements for Weighing Equipment
(July 23, 2015 APWA GSP, Option 2)

Revise item 4 of the fifth paragraph to read:

4. Test results and scale weight records for each day's hauling operations are provided to the Engineer daily. Reporting shall utilize WSDOT form 422-027, Scaleman's Daily Report, unless the printed ticket contains the same information that is on the Scaleman's Daily Report Form. The scale operator must provide AM and/or PM tare weights for each truck on the printed ticket.

1-09.6 Force Account
(October 10, 2008 APWA GSP)

Supplement this section with the following:

The Contracting Agency has estimated and included in the Proposal, dollar amounts for all items to be paid per force account, only to provide a common proposal for Bidders. All such dollar amounts are to become a part of Contractor's total bid. However, the Contracting Agency does not warrant expressly or by implication that the actual amount of work will correspond with those estimates. Payment will be made on the basis of the amount of work actually authorized by Engineer.

1-09.9 Payments
(March 13, 2012 APWA GSP)

Delete the first four paragraphs and replace them with the following:

The basis of payment will be the actual quantities of Work performed according to the Contract and as specified for payment.

The Contractor shall submit a breakdown of the cost of lump sum bid items at the Preconstruction Conference, to enable the Project Engineer to determine the Work performed on a monthly basis. A breakdown is not required for lump sum items that include a basis for incremental payments as part of the respective Specification. Absent a lump sum breakdown, the Project Engineer will make a determination based on information available. The Project Engineer's determination of the cost of work shall be final.

Progress payments for completed work and material on hand will be based upon progress estimates prepared by the Engineer. A progress estimate cutoff date will be established at the preconstruction conference.

The initial progress estimate will be made not later than 30 days after the Contractor commences the work, and successive progress estimates will be made every month thereafter until the Completion Date. Progress estimates made during progress of the work are tentative, and made only for the purpose of determining progress payments. The progress estimates are subject to change at any time prior to the calculation of the final payment.

The value of the progress estimate will be the sum of the following:

1. Unit Price Items in the Bid Form - the approximate quantity of acceptable units of work completed multiplied by the unit price.
2. Lump Sum Items in the Bid Form - based on the approved Contractor's lump sum breakdown for that item, or absent such a breakdown, based on the Engineer's determination.
3. Materials on Hand - 100 percent of invoiced cost of material delivered to Job site or other storage area approved by the Engineer.
4. Change Orders - entitlement for approved extra cost or completed extra work as determined by the Engineer.

Progress payments will be made in accordance with the progress estimate less:

1. Retainage per Section 1-09.9(1), on non FHWA-funded projects;
2. The amount of progress payments previously made; and
3. Funds withheld by the Contracting Agency for disbursement in accordance with the Contract Documents.

Progress payments for work performed shall not be evidence of acceptable performance or an admission by the Contracting Agency that any work has been satisfactorily completed. The determination of payments under the contract will be final in accordance with Section 1 05.1.

1-09.13 Claims Resolution

1-09.13(3) Claims $250,000 or Less

1-09.13(3)A Administration of Arbitration

(July 23, 2015 APWA GSP)

Revise the third paragraph to read:

The Contracting Agency and the Contractor mutually agree to be bound by the decision of the arbitrator, and judgment upon the award rendered by the arbitrator may be entered in the Superior Court of the county in which the Contracting Agency's headquarters is located, provided that where claims subject to arbitration are asserted against a county, RCW 36.01.05 shall control venue and jurisdiction of the Superior Court. The decision of the arbitrator and the specific basis for the decision shall be in writing. The arbitrator shall use the Contract as a basis for decisions.

DIVISION 2 EARTHWORK

2-02 Removal of Structures and Obstructions

2-02.3 Construction Requirements

Supplement this section with the following:

Removal of Obstructions
Removal shall include, but not be limited to, all items indicated on the Pre-Engineered Restroom Plan including signs, sign posts, portable restrooms (to be relocated on site), curbing, and wheel stop.

All existing curbing to be removed shall be saw cut.

Also remove obstructions encountered including, but not limited to, tree roots, stumps, abandoned piling, buildings and structures, and debris of all types. Except as specified elsewhere or as shown on the Plans, upon their removal, the structures and obstructions, except for items specified to be salvaged, shall become the property of the Contractor and the Contractor shall dispose of them in a manner meeting all requirements of federal, state, county, and local laws and regulations.

2-03 Roadway Excavation and Embankment

2-03.3 Construction Requirements

2-03.3(7) Disposal of Surplus Material

This section is deleted and replaced with the following:

A waste site has not been provided by the Contracting Agency for the disposal of excess materials and construction debris. The Contractor shall be solely responsible for loading, hauling, and the disposal of all surplus material and construction debris in a manner complying with all local, state, and federal statutes and regulations.

2-03.3(13) Borrow

Supplement this section with the following:

The Contractor must provide the Engineer with written notice at least 24 hours before hauling and placing backfill materials from off-site locations. This notice is essential in scheduling inspection personnel and item quantity ticket takers. Failure by the Contractor to begin hauling and placing materials at the agreed time may result in a penalty equal to the standby cost incurred by the County. The penalty will be calculated and deducted from the item being hauled.

2-03.5 Payment

Supplement this section with the following:

All costs involved in the loading, hauling, and the disposal of all surplus material and construction debris shall be included in the bid prices of the items included on the proposal, and no further payment will be made.

2-07 Watering

2-07.4 Measurement

Supplement this section with the following:

The unit of measure M Gallon shown on the proposal for water indicates 1,000 gallons. The unit bid price entered on the proposal by the bidder shall be for each 1,000 gallons.

2-09 Structure Excavation

2-09.3 Construction Requirements

2-09.3(1) General Requirements

2-09.3(1)C Removal of Unstable Base Material

Revise this section to read:

When the material at the bottom of an excavation is not stable enough to support the Structure, the Contractor shall excavate below grade and replace the unstable material with gravel borrow.

Gravel borrow shall be placed in layers not more than 6 inches thick with each layer compacted to 95 percent of the maximum density determined by the Compaction Control Test, Section 2-03.3(14)D.

DIVISION 4 BASES

4-04 Ballast and Crushed Surfacing

4-04.2 Materials

Supplement this section with the following:

Choker Course
Aggregate for choker course shall meet the requirements of Section 9-03.1(4)C AASHTO GRADING No. 57.

4-04.3 Construction Requirements

4-04.3(7) Miscellaneous Requirements

Supplement this section with the following:

The Contractor must provide the Engineer with written notice at least 24 hours before hauling and placing surfacing materials from off-site locations. This notice is essential in scheduling inspection personnel and item quantity ticket takers. Failure by the Contractor to begin hauling and placing materials at the agreed time may result in a penalty equal to the standby cost incurred by the County. The penalty will be calculated and deducted from the item being hauled.

4-04.4 Measurement

Supplement this section with the following:

Choker Course will be measured per ton.

4-04.5 Payment

Supplement this section with the following:

"Choker Course", per ton.

The unit contract price shown in the proposal for "Choker Course" shall be full pay for labor, tools, materials, and equipment necessary to furnish and install choker course.

THIS PAGE INTENTIONALLY LEFT BLANK

DIVISION 6 STRUCTURES

6-01 General Requirements for Structures

6-01.2 Foundation Data

Supplement this section with the following:

Test pit information prepared for this project is provided in Attachment C.

THIS PAGE INTENTIONALLY LEFT BLANK

DIVISION 8 MISCELLANEOUS CONSTRUCTION

8-01 Erosion Control and Water Pollution Control

8-01.1 Description

Supplement this section with the following:

This work shall include preparing and implementing a Temporary Erosion and Sedimentation Control (TESC) Plan by the Contractor for this contract and providing a certified Erosion and Sediment Control (ESC) Lead to implement the TESC Plan.

8-01.3 Construction Requirements

8-01.3(1) General

Supplement this section with the following:

Maintenance of Project Site
The Contractor shall be responsible for controlling dust and mud 24 hours a day within the project limits, and for maintaining in a clean condition all parking lots and streets within and adjacent to the project limits during the performance of this Contract. The Contractor shall be prepared to and shall use watering trucks, power vacuum sweepers, power vacuum units, and other appropriate equipment necessary to remove mud, debris, or other foreign objects of materials from the roadway. The Contractor shall be solely responsible to remedy any damage caused by dust, mud, debris, or foreign object or material resulting from the Contractor's operations.

The Contractor shall protect existing drainage structures and facilities, adjacent water bodies, neighboring properties, and the traveling public from dust and mud within the project limits by the use of silt fences, sediment socks, water trucks, sweepers, and any other material and equipment needed to perform these duties. The Contractor shall be solely responsible to remedy any damage caused by dust, mud, debris, or foreign objects or material resulting from the Contractor's operations.

Watering trucks shall not be used on streets where, in the opinion of the Engineer, insufficient capacity or protections are in place to prevent compromising water quality.

Maintenance of the project site shall include but not be limited to the following:

- The asphalt roadway shall be kept cleaned throughout the day. All dirt tracked out from traffic driving through the construction shall be cleaned up immediately.
- The Contractor shall install erosion and sediment control measures shown in the Plans that may include but not be limited to silt fences, high visibility fences,

storm drain inlet protection, sediment traps, gravel berms, temporary discharge spillway, construction entrances, seeding, fertilizing, and mulching.

- Dust control shall be maintained at all times. The Contractor shall be available during evenings and weekends if the Engineer determines that adequate measures are not in place to prevent fugitive dust from impacting the neighboring properties and the traveling public.
- The Contractor shall cover all spoils piles and material stockpiles with plastic to prevent dust or mud runoff from these areas.
- The Contractor shall maintain all erosion control facilities as specified in Section 8-01.3(15) Maintenance of the Standard Specifications. Payment for maintenance shall be included in Erosion/ Water Pollution Control and the other bid items.
- The Contractor shall provide an ESC lead to provide all requirements as specified in Section 8-01.3(1)B of the Standard Specifications.

In the event that dust and mud control is not provided, and roadway conditions resulting from the Contractor's operations are not remedied to the Engineer's satisfaction within 1 hour of notification from the Engineer, then the Engineer may, without further notice to the Contractor or Surety, have the work performed by others and deduct the costs from any payment due or coming due the Contractor.

8-01.3(1)A Submittals

Delete the first sentence and replace it with the following:

The Contractor shall prepare a TESC Plan for the contract and shall submit this TESC Plan to the Engineer 5 days prior to the preconstruction conference. The Contractor's TESC Plan shall include textual and graphic depictions explaining and demonstrating how the Plan will be implemented and incorporated into the Contractor's progress schedule. The TESC shall identify and provide a 24-hour a day contact phone number for the ESC Lead.

8-01.3(1)C Water Management

Supplement this section with the following:

The Contractor shall anticipate that groundwater may be encountered in excavations for the restroom vaults. Refer to the attached geotechnical information.

Excavations shall be dewatered by whatever means and methods deemed most effective and efficient by the Contractor to provide a dry, unsaturated condition during excavation, vault placement, compaction, and backfilling activities until ground cover is permanently stabilized. Groundwater shall not be allowed to rise above the bottom of any active excavation area, or be allowed to re-enter and remain within the

excavation at any time unless the ground cover is stabilized and segregated from the active excavation areas.

The configuration, size, and capacity of dewatering systems and equipment shall maintain active excavations free of water at all times and shall prevent bottom heave, instability of the foundation, collapse of walls, and/or similar detrimental occurrences. The Contractor shall determine the size, capacity, and configuration of all piping and equipment required for dewatering and shall furnish, install, and maintain in operation all such piping and equipment until all construction is completed.

The Contractor shall maintain the dewatering systems in place and in operation for whatever time required to properly dewater excavation areas prior to and during excavation and during backfilling. The Contractor shall make all arrangements for and shall pay all costs of power and maintenance necessary for operation of pumps (if used). The Contractor shall install and maintain temporary drains and drain ditches, as required, to intercept or control and direct surface which may affect the execution or condition of the work.

All surface or groundwater controlled and/or directed by the Contractor shall be disposed of in accordance with the requirements and regulations imposed by local, state, and federal agencies. Clean, non-turbid dewatering water may be spread on the existing permeable pavement parking lot within the Contractor's staging area and allowed to infiltrate.

8-01.4 Measurement

Supplement this section with the following:

Straw Wattle will be measured by the linear foot.

8-01.5 Payment

Supplement this section with the following:

"Erosion/Water Pollution Control", per lump sum.

The lump sum Contract price for Erosion/Water Pollution Control shall be full pay for preparation and implementation of the TESC Plan including provision of an ESC Lead to implement the TESC Plan, and dewatering.

"Straw Wattle", per linear foot.

8-12 Chain Link Fence and Wire Fence

8-12.1 Description

Supplement this section with the following:

This work shall include furnishing temporary 6-foot chain link fence as shown on the Plans.

8-12.4 Measurement

Supplement this section with the following:

Temporary 6-foot chain link fences will be measured by the linear foot.

8-12.5 Payment

Supplement this section with the following:

"Temporary 6 Foot Chain Link Fence", per linear foot.

8-20 Illumination, Traffic Signal Systems, Intelligent Transportation Systems, and Electrical

8-20.1 Description

Section 8-20.1 is supplemented with the following:

Electrical work shall consist of connecting the pre-engineered restroom to the existing live power as shown on the Plans.

8-20.1(1) Regulations and Code

Section 8-20.1(1) is supplemented with the following:

All material and work shall conform to the requirements of:

1. Latest adopted (by Washington State) edition of the National Electrical Code (NEC).

2. Laws, Rules, and Regulations for Installing Electric Wires and Equipment, Department of Labor and Industries, State of Washington (L&I).

3. National Electrical Manufacturers Association (NEMA).

4. American Society for Testing and Materials (ASTM).

5. American Standards Association (ASA).

6. American National Standards Institute (ANSI).

7. Washington State Department of Transportation *Standard Specifications for Road, Bridge and Municipal Construction* 2016 (Standard Specifications).

8. Washington State Department of Transportation *Standard Plans for Road, Bridge and* Municipal *Construction,* latest edition (Standard Plans).

9. All applicable provisions of the Revised Code of Washington (RCW) and the Washington Administrative Code (WAC), particularly those addressing the requirements for excavation and installation of underground utilities.

12. Puget Sound Energy (Puget Power).

Prior to start of work, all necessary licenses, permits, and approvals shall be obtained. The Contractor shall comply with all laws, ordinances, rules, orders, and regulations relating to the performance of the work, the protection of adjacent property, and the maintenance of all other facilities. The Contractor will be required to comply with all the provisions of these instruments and shall save and hold the County harmless from any damage which may be incurred as a result of the Contractor's failure to comply with all the terms of these permits.

The Contractor is advised that an Electric Work Permit from the State Department of Labor and Industries shall be required for this project.

8-20.2 Materials

Section 8-20.2 is supplemented with the following:

Materials shall be as specified in Section 9-29 of the Standard Specifications and Section 9-29 of these Special Provisions. All materials shall be furnished by the Contractor.

8-20.3 Construction Requirements

8-20.3(1) General

Section 8-20.3(1) is supplemented with the following:

All equipment shall be handled and protected so as to prevent damage. Damaged equipment, if any, shall be repaired or replaced by the Contractor to the satisfaction of the Engineer at no additional cost to the Owner.

No new facilities shall be installed as part of this Contract that are in conflict with any existing utilities, or the code required thereby. It shall be the Contractor's responsibility to locate all utilities whether above, on, or below the ground, and to protect against any and all damages arising from work under this project. At least 48 hours before digging, the Contractor shall call the Utilities Underground Locator Center (telephone: 1-800-424-5555). Contractor must maintain locates during the duration of the project once they have been identified.

The Contractor is advised that safe wiring labels required by the State of Washington Department of Labor and Industries shall apply on this project.

All manufacturers' warranties or guarantees on all electrical and mechanical equipment, consistent with those provided as customary trade practice, shall be assigned to the County.

8-20.3(2) Excavating and Backfilling

Section 8-20.3(2) is supplemented with the following:

Backfill for trenches may consist of select native backfill from the excavation providing that such material is free of organic material, clay, or other deleterious material. If sufficient material from the excavation is not available, as determined by the Engineer, the Contractor shall furnish and install gravel borrow for trench backfill.

All trenches shall be mechanically compacted by a power operated mechanical tamper or other mechanical compaction device approved by the Engineer. Compaction shall be in conformance with Section 2-30.3(14), Method C of the Standard Specifications. The temporary restoration of conduit trenches shall be as directed by the Engineer.

The Contractor warrants and represents awareness of the statutory provisions contained in RCW 19.122.010 through 19.122.900, that the Contractor has read and fully understands the same, and will comply with the requirements of these provisions which are incorporated by reference herein. The Contractor agrees that all trenching as well as excavating for all pole foundations shall be an "excavation" as defined under

RCW Chapter 19.122 and that such utilities constitute underground facilities. The parties agree that remedies affected under RCW Chapter 19.122 are also incorporated by reference herein. Any cost to the Contractor as a result of this law shall be at the Contractor's expense.

8-20.3(5) Conduit

Section 8-20.3(5) is supplemented with the following:

Galvanized rigid steel conduit shall be used at the following locations:

1. All conduit above ground.

2. All conduit between the pole foundation and the adjacent junction box.

Schedule 40 rigid PVC conduit shall be used at all other locations except that a run out of a junction box that goes to another junction box, shall be rigid metallic galvanized steel regardless of conduit type used for the remainder of the run.

All galvanized conduit in contact with concrete shall be wrapped with 2-inch-wide, 10-mil-thick electrical tape, half-lapped.

All conduit installed underground shall have polyethylene Underground Hazard Marking Tape, 6 inches wide, red, legend "Caution-Electric Line Buried Below," placed approximately 12 inches above the conduit.

8-20.3(6) Junction Boxes, Cable Vaults, and Pull boxes

Section 8-20.3(6) is supplemented with the following:

Junction boxes shall be installed as needed to provide the electrical power connection.

8-20.4 Measurement

Section 8-20.4 is supplemented with the following:

Electrical shall be measured per lump sum.

8-20.5 Payment

Section 8-20.5 is supplemented with the following:

"Electrical", per lump sum.

The lump sum contract price for "Electrical" shall be full compensation for the costs of all labor, tools, equipment, and materials necessary and incidental to connect existing power to the restroom and provide a fully functioning system including excavation,

haul, backfilling, compaction, coordination with power provider, and all materials including wire, conduit and junction boxes as needed.

Add the following new sections:

8-30 Relocate Wheel Stop

8-30.1 Description

This work shall consist of re-locating the concrete wheel stops as shown in the Plans.

8-30.4 Measurement

Relocate wheel stop will be measured per lump sum.

8-30.5 Payment

Payment will be made in accordance with Section 1-04.1 for the following bid items that are included in the Proposal:

"Relocate Wheel Stop", per lump sum.

8-31 Cement Concrete Slab

8-31.1 Description

This work shall consist of construction of a cement concrete slab as shown on the Plans including the Romtec Plans in Attachment D.

8-31.2 Materials

Cement concrete for the concrete slab shall consist of commercial concrete.

8-31.4 Measurement

Concrete slab will be measured per lump sum.

Measurement for concrete slab will include excavation including haul, subgrade preparation, and installation of Portland cement concrete.

8-31.5 Payment

Payment will be made in accordance with Section 1-04.1 for the following bid items that are included in the Proposal:

"Cement Concrete Slab", per lump sum.

The unit contract price shown on the proposal for "Cement Concrete Slab" shall be full pay for labor, tools, materials, and equipment necessary to complete the work as shown in the Plans, complete.

8-32 Permeable Pavers

8-32.1 Description

This work shall consist of removal and relocation of existing permeable concrete pavers and furnishing and installing permeable interlocking concrete pavers and aggregate bedding course as shown in the Plans.

8-32.2 Materials

Permeable Pavers
Permeable pavers shall consist of the following:

5-inch by 10-inch by 3-1/8-inch (80 mm) thick pre-cast permeable interlocking concrete pavers from a commercial supplier, available at the time of bidding, and in common use for other similar applications such as driveways and parking lots. Pavers that do not meet the specific dimensions specified will not be accepted. The pavers shall conform, at a minimum, to the requirements of ASTM C936 Standard Specifications for Solid Interlocking Pavers. The paver installation pattern is primarily herringbone as shown on the Plans. The pavers shall be integrally colored and shall be brick red or approved equal.

Contractor shall submit samples of and cut sheets for the proposed pavers to the Engineer a minimum of 10 days prior to installation for review and acceptance. Submittal shall include pavers of each color.

Aggregate Bedding Course
Aggregate for bedding course shall meet the requirements of Section 9-03.1(4)C AASHTO GRADING No. 8.

8-32.3 Construction Requirements

Permeable pavers shall be installed according to the manufacturer's recommendations and the methods described in the Permeable Interlocking Pavement Manual published by the Interlocking Concrete Pavement Institute. A copy

of the written manufacturer's installation recommendations shall be provided to the Engineer prior to installation. Paving installation subcontractor job foreman shall have a current designation from the Interlocking Concrete Pavement Institute as a Permeable Interlocking Concrete Pavements Specialist. Demonstration of the designation shall be provided with the paver submittal.

Confirmation of Paver Layout

Prior to installation of concrete curbing at the project site, the paving installation subcontractor job foreman shall confirm that the paver and concrete curbing layout shown on the Plans will allow for a durable and attractive paver installation that avoids or minimizes installation of small or "sliver" like pavers that are less than 1/3 of the original paver size or creates gaps wider than 3/8-inch. The foreman shall recommend layout changes to the Engineer and shall coordinate acceptable changes with the Engineer and Contractor.

Subgrade Preparation and Ballast/Choker Course Placement

Protect native subgrade to remain. Keep traffic off of the prepared subgrade during construction. Final 12-inch excavation of native subgrade to be done at time of placement of permeable ballast/choker course in order to protect the existing subgrade infiltration capabilities. Final excavation shall proceed as machinery is pulling back and travelling on preliminary grade as final grade is excavated.

To prevent compaction when installing the permeable ballast/choker course, these materials shall be dumped onto the subgrade from the edge of the installation and pushed out onto the subgrade.

Maintain flow diversion measures to prevent runoff and sediment from entering the work limits. Remove debris or sediment that has accumulated on the finished subgrade after viewing and before placing permeable ballast/choker course.

Place and compact permeable ballast/choker course aggregate to the grades indicated on the Plans in 6-inch maximum compacted lifts. Compaction shall be performed using a plate compactor until the rock is dense and unyielding.

Protect placed aggregate from stormwater run-on and contamination from adjacent exposed soils.

8-32.4 Measurement

Permeable pavers will be measured per lump sum.

Measurement for permeable pavers will include subgrade preparation including compaction of native soils at subgrade.

8-32.5 Payment

Payment will be made in accordance with Section 1-04.1 for the following bid items that are included on the Proposal:

"Permeable Pavers", per lump sum.

The unit contract price shown in the proposal for "Permeable Pavers" shall be full pay for labor, tools, materials, and equipment necessary to complete the work as shown on the Plans including subgrade preparation, subgrade compaction, aggregate compaction, removal and reinstallation of existing permeable pavers, furnishing and installing new permeable pavers, joint aggregate, and aggregate bedding course.

8-33 Construct Pre-Engineered Restroom

8-33.1 Description

This work shall consist of constructing the Romtec preeingineered restroom provided by Kitsap County.

8-33.2 Materials

Constructing the pre-engineered restroom requires the Contractor to furnish all items not provided by Romtec. A complete list of materials to be provided by the Contractor is provided in the Romtec Plans and Specifications provided in Attachment D.

8-33.3 Construction Requirements

The Contractor shall coordinate with Romtec to arrange for delivery of the restroom materials to the project site. Unloading of materials from the delivery vehicle shall be performed by the Contractor. Construction shall be performed according to these Plans and Specifications and the Romtec Plans and Specifications in Attachment D.

8-33.4 Measurement

Construct Prengineered Restroom shall be measured per lump sum.

8-33.5 Payment

Payment will be made in accordance with Section 1-04.1 for the following bid items that are included on the Proposal:

"Construct Pre-Engineered Restroom", per lump sum.

The lump sum contract price shown in the proposal for “Construct Pre-Engineered Restroom” shall be full pay for labor, tools, materials, and equipment necessary to construct the restroom including delivery coordination and material storage, excavation, shoring, dewatering, haul, backfill using native material, compaction, preventing the vaults from floating, furnishing materials, furnishing and installing bollards, bollard footings and column footings, reinstalling signs, building erection, and finish work, complete to provide a fully functioning restroom.

END OF SPECIAL PROVISIONS

STANDARD PLANS

(January 4, 2016 WSDOT GSP)

The State of Washington Standard Plans for Road, Bridge and Municipal Construction M21-01 transmitted under Publications Transmittal No. PT 15-048, effective August 3, 2015 is made a part of this contract.
The Standard Plans are revised as follows:

A-30.15
DELETED

A-50.10
Sheet 2 of 2, Plan, with Single Slope Barrier, reference C-14a is revised to C-70.10

A-50.20
Sheet 2 of 2, Plan, with Anchored Barrier, reference C-14a is revised to C-70.10

A-50.30
Sheet 2 of 2, Plan (top), reference C-14a is revised to C-70.10

B-10.20 and B-10.40
Substitute "step" in lieu of "handhold" on plan

B-15.60
Table, Maximum Knockout Size column, 120" Diam., 42" is revised to read; 96"

B-25.20
Add Note 7. See Standard Specification Section 8-04 for Curb and Gutter requirements

B-55.20
Metal Pipe elevation, title is revised to read; "Metal Pipe and Steel Rib Reinforced Polyethylene Pipe"

B-90.40
Offset & Bend details, add the subtitle, "Plan View" above titles

C-8b
Section A, callout, was – "Grout" is revised to read; "Grout ~ 2" (IN) MAX., callout, was – "Anchor Bolt (TYP.) ~ See Detail" is revised to read; "Anchor Bolt or Rod (TYP.) ~ See Detail", Sheet 2, Detail "A", callout, was – "Anchor Bolt (TYP.) ~ See Detail", is revised to read; "Anchor Bolt or Rod (TYP) ~ See Detail". Anchor Bolt Detail, DELETED – Headed Bolt DETAIL portion of the ANCHOR BOLT DETAIL. Dimension, "5 1/2" MIN. Threads" is deleted. Add dimension, "1" MAX." from top of barrier to bottom of the nut, Callout, was – "1" Diam. Threaded Rod ~ ASTM A 419" is revised

to read; “1” (IN) Diam. Threaded Full Length Rod or Bolt ~ ASTM F 1554, Grade 105”. Note (Below Title), was – “Galvanize Exposed Anchor Rod End 1’ – 9” Min.” is revised to read; “Galvanized Anchor Bolt Full Length according to ASTM F 2329”. Subtitle – was “Threaded Rod” is revised to read; “Threaded Rod or Bolt”, Sheet 2, Anchor Plate detail, callout, was – 1” DIAM. HOLE (TYP.)” IS REVISED TO READ; “1 1/8” (IN) DIAM. HOLE (TYP.)” , callout, was – “/2” Plate” is revised to read;”1/2” (IN) Plate ~ ASTM A36

C-1
Assembly Detail, Steel Post, (post) callout – was - ”W6 x 9 or W6 x 15” is revised to read; “W6 x 8.5 or W6 x 9 or W6 x 15”

C-10
General Note 1, first sentence, was – “Length of W8 x 35 and W6 x 9 shall be determined by measurement from top of ground to top of grout pad.” Is revised to read; “Length of W8 x 35 and W6 x 8.5 or W6 x 9 shall be determined by measurement from top of ground to top of grout pad.”
Sheet 1, Post Base Plate Detail, callout, was – “W6 x 9” is revised to read; “W6 x 8.5 or W6 x 9”
Sheet 1, Box Culvert Guardrail Steel Post Type 2 detail, callout, was – “W6 x 9 Steel Post” is revised to read;” “W6 x 8.5 or W6 x 9 Steel Post”
Sheet 1, Post Anchor Attachment Detail, callout, was – “W6 x 9 ~ See Note 1” is revised to read; “W6 x 8.5 or W6 x 9 ~ See Note 1”
Sheet 1, Detail A, callout, was – “W6 x 9 Steel Post ~ See Note 1” is revised to read; “W6 x 8.5 or W6 x 9 Steel Post ~ See Note 1”
Sheet 2, Box Culvert Guardrail Steel Post Type 1, callout, was – “W6 x 9 x 27.5” Steel Post” is revised to read; “W6 x 8.5 x 27.5” (IN) or W6 x 9 x 27.5” (IN) Steel Post”
Sheet 2, Detail B, callout, was – “W6 x 9 x 27.5” Steel Post” is revised to read; “W6 x 8.5 x 27.5” (IN) or W6 x 9 x 27.5” (IN) Steel Post”

C-16a
Note 1, reference C-28.40 is revised to C-20.10

C-16b
Note 3, reference C-28.40 is revised to C-20.10

C-22.14
Plan, callout, was – “Location of Post (Without Block) ~ W6 x 9 Steel Post Only” is revised to read; “Location of Post (Without Block) ~ W6 x 8.5 or W6 x 9 Steel Post Only”

Elevation, callout, was – “Location of Post (Without Block) ~ W6 x 9 Steel Post Only” is revised to read; “Location of Post (Without Block) ~ W6 x 8.5 or W6 x 9 Steel Post Only”

C-22.45
Note 1, was – "This Terminal is FHWA accepted at Test Level Two (TL-2) and may be used in applications with speeds of 40 MPH or less." Is revised to read: "This Terminal is FHWA accepted at Test Level Two (TL-2) and may be used in applications with speeds of 45 MPH or less." Plan Title, was – "Beam Guardrail Type 31 Non – Flared Terminal Steel Posts (Posted Speed ~ 40 MPH and Below)" is revised to read: "Beam Guardrail Type 31 Non – Flared Terminal Steel Posts (Posted Speed ~ 45 MPH and Below

D-10.10
Wall Type 1 may be used if no traffic barrier is attached on top of the wall. Walls with traffic barriers attached on top of the wall are considered non-standard and shall be designed in accordance with the current WSDOT Bridge Design Manual (BDM) and the revisions stated in the 11/3/15 Bridge Design memorandum.

D-10.15
Wall Type 2 may be used if no traffic barrier is attached on top of the wall. Walls with traffic barriers attached on top of the wall are considered non-standard and shall be designed in accordance with the current WSDOT BDM and the revisions stated in the 11/3/15 Bridge Design memorandum.

D-10.20
Wall Type 3 may be used in all cases. The last sentence of Note 6 on Wall Type 3 shall be revised to read: The seismic design of these walls has been completed using a site adjusted (effective) peak ground acceleration of 0.32g.

D-10.25
Wall Type 4 may be used in all cases. The last sentence of Note 6 on Wall Type 4 shall be revised to read: The seismic design of these walls has been completed using a site adjusted (effective) peak ground acceleration of 0.32g.

D-10.30
Wall Type 5 may be used in all cases.

D-10.35
Wall Type 6 may be used in all cases.

D-10.40
Wall Type 7 may be used if no traffic barrier is attached on top of the wall. Walls with traffic barriers attached on top of the wall are considered non-standard and shall be designed in accordance with the current WSDOT BDM and the revisions stated in the 11/3/15 Bridge Design memorandum.

D-10.45
Wall Type 8 may be used if no traffic barrier is attached on top of the wall. Walls with traffic barriers attached on top of the wall are considered non-standard and shall be designed in accordance with the current WSDOT BDM and the revisions stated in the revisions stated in the 11/3/15 Bridge Design memorandum.

D-15.10
STD Plans D-15 series "Traffic Barrier Details for Reinforced Concrete Retaining Walls" are withdrawn. Special designs in accordance with the current WSDOT BDM are required in place of these STD Plans.

D-15.20
STD Plans D-15 series "Traffic Barrier Details for Reinforced Concrete Retaining Walls" are withdrawn. Special designs in accordance with the current WSDOT BDM are required in place of these STD Plans.

D-15.30
STD Plans D-15 series "Traffic Barrier Details for Reinforced Concrete Retaining Walls" are withdrawn. Special designs in accordance with the current WSDOT BDM are required in place of these STD Plans.

F-10.12
Section Title, was – "Depressed Curb Section" is revised to read: "Depressed Curb and Gutter Section"

F-10.40
"EXTRUDED CURB AT CUT SLOPE", Section detail - Deleted

F-10.42
DELETE – "Extruded Curb at Cut Slope" View

G-24.40
Sheet 1, Elevation (upper left corner), callout, was – "Sign Brace~ 36" (IN) or larger in width required (See Standard Plan G-50.10)" is revised to read; "Sign Brace (See Standard Plan G-50.10)" Sheet 3, Elevation (upper left corner), callout, was – "Sign Brace~ 36" (IN) or larger in width required (See Standard Plan G-50.10)" is revised to read; "Sign Brace (See Standard Plan G-50.10)"

H-70.20
Sheet 2, Spacing Detail, Mailbox Support Type 1, reference to Standard Plan I-70.10 is revised to H-70.10

I-80.10
Stabilized Construction Entrance, Isometric View, add Note to read; “Note: At the discretion of the contractor, smaller rock may be used to fill in voids between the quarry spalls to create a walking pathway for crossing the construction entrance.”

J-3
DELETED

J-3b
DELETED

J-3C
DELETED

J-10.21
Note 18, was – “When service cabinet is installed within right of way fence, see Standard Plan J-10.22 for details.” Is revised to read; “When service cabinet is installed within right of way fence, or the meter base is mounted on the exterior of the cabinet, see Standard Plan J-10.22 for details.”

J-10.22
Key Note 1, was – “Meter base per serving utility requirements~ as a minimum, the meter base shall be safety socket box with factory-installed test bypass facility that meets the requirements of EUSERC drawing 305.” Is revised to read; “Meter base per serving utility requirements~ as a minimum, the meter base shall be safety socket box with factory-installed test bypass facility that meets the requirements of EUSERC drawing 305. When the utility requires meter base to be mounted on the side or back of the service cabinet, the meter base enclosure shall be fabricated from type 304 stainless steel.”

Key Note 4, “Test with (SPDT Snap Action, Positive close 15 Amp – 120/277 volt “T” rated). Is revised to read: “Test Switch (SPDT snap action, positive close 15 amp – 120/277 volt “T” rated).”

Key Note 14, was – “Hinged dead front with ¼ turn fasteners or slide latch.” Is revised to read; “Hinged dead front with ¼ turn fasteners or slide latch. ~ Dead front panel bolts shall not extend into the vertical limits of the breaker array(s).”

Key Note 15, was – “Cabinet Main Bonding Jumper. Buss shall be 4 lug tinned copper. See Cabinet Main bonding Jumper detail, Standard Plan J-3b.” is revised to read; “Cabinet Main Bonding Jumper Assembly ~ Buss shall be 4 lug tinned copper ~ See Standard Plan J-10.20 for Cabinet Main Bonding Jumper Assembly details.”

J-20.10
Add Note 5, “5. One accessible pedestrian signal assembly per pedestrian pushbutton post.”

J-20.11
Sheet 2, Foundation Detail, Elevation, callout – “Type 1 Signal Pole” is revised to read: “Type PS or Type 1 Signal Pole”

Sheet 2, Foundation Detail, Elevation, add note below Title, “(Type 1 Signal Pole Shown)”

Add Note 6, “6. One accessible pedestrian signal assembly per pedestrian pushbutton post.”

J-20.26
Add Note 1, “1. One accessible pedestrian pushbutton station per pedestrian pushbutton post.”

J-20.16
View A, callout, was – LOCK NIPPLE, is revised to read; CHASE NIPPLE

J-21.10
Sheet 1 of 2, Elevation view (Round), add dimension depicting the distance from the top of the foundation to find 2 #4 reinforcing bar shown, to read; 3” CLR. Delete “(TYP.)” from the 2 ½” CLR. dimension, depicting the distance from the bottom of the foundation to find 2 # 4 reinf. Bar.

Sheet 1 of 2, Elevation view (Square), add dimension depicting the distance from the top of the foundation to find 1 #4 reinforcing bar shown, to read; 3” CLR. Delete “(TYP.)” from the 2 ½” CLR. dimension, depicting the distance from the bottom of the foundation to find 1 # 4 reinf. Bar.

Sheet 2 of 2, Elevation view (Round), add dimension depicting the distance from the top of the foundation to find 2 #4 reinforcing bar shown, to read; 3” CLR. Delete “(TYP.)” from the 2 ½” CLR. dimension, depicting the distance from the bottom of the foundation to find 2 # 4 reinf. Bar.

Sheet 2 of 2, Elevation view (Square), add dimension depicting the distance from the top of the foundation to find 1 #4 reinforcing bar shown, to read; 3” CLR. Delete “(TYP.)” from the 2 ½” CLR. dimension, depicting the distance from the bottom of the foundation to find 1 # 4 reinf. Bar.

J-21.15
Partial View, callout, was – LOCK NIPPLE ~ 1 ½” DIAM., is revised to read; CHASE NIPPLE ~ 1 ½” (IN) DIAM.

J-21.16
Detail A, callout, was – LOCKNIPPLE, is revised to read; CHASE NIPPLE

J-22.15
Ramp Meter Signal Standard, elevation, dimension 4' - 6" is revised to read; 6'-0"

(2x) Detail A, callout, was – LOCK NIPPLE ~ 1 ½" DIAM. is revised to read; CHASE NIPPLE ~ 1 ½" (IN) DIAM.

J-28.45
Steel Light Standard Elbow Detail, dimension, was – "1-1/2" MAX." is revised to read; 2" MAX.. callout, was – "1.00 – 8 UNC x 8" (IN) long bolt threaded full length (ASTM A325 or F1554 GR. 105) with two heavy hex nuts, two plate washers, and a round washer (Typ.) (Galvanized AASHTO M232)"is revised to read; "1.00 – 8 UNC x 8 1/2" (IN) long bolt threaded full length (ASTM A325 or F1554 GR. 105) with two heavy hex nuts, two plate washers, and a round washer (Typ.) (Galvanized per AASHTO F2329)". callout, was – "3/16" (IN) thick preformed "Fabreeka" fabric pad with 5" (IN) diam. hole ~ cement to flange plate and trim outside edge flush" is revised to read; "3/16" (IN) or 1/4" (IN) thick preformed "Fabreeka" fabric pad with 5" (IN) diam. hole ~ cement to flange plate and trim outside edge flush". Exploded Isometric View, callout, was – "1" (IN) Diam. Heavy Hex Bolt (Typ.)" is revised to read;1" Diam. Bolt (Typ.). Section B, callout, was – "3 1/2" (IN) x 3/16" (IN)(17" (IN)…" is revised to read; "4" (IN) x 3/16" (IN)(17" (IN)…". Typical Sections, two traffic barrier views, add dimension [from the top of the pole base plate to the bottom of the Hand Hole]"6" MIN.". all three views, callout, was – "1" (IN) Diam. H. S. bolt w/ hardened lock washer and nut (Typ.) (ASTM A325 or F1554 GR. 105)" is revised to read; "1" (IN) Diam. H. S. bolt w/ hardened lock washer and nut (Typ.) (ASTM A449 or F1554 GR. 105)".

J-28.50
Section D, callout, was – Backup Strip (ref. to key note 3) is revised to read; "Continuous Backup Strip (ref. to key note 3)"

Key Note 3, was – ¼" Thick, or No thinner than pole wall thickness. Tack weld or seal weld to Base plate. Is revised to read; "1/4" Thick, or No thinner than Pole wall thickness. Tack weld in root or continuous seal weld to Base plate or Pole wall."

J-28.60
Section B, callout, was – "Continuous Back-up ring – 1/4" or no thinner than pole wall thickness ~ tack weld to plate" is revised to read; "Continuous Back-up ring ~ 1/4" or no thinner than pole wall thickness ~ tack weld in root or continuous seal weld to base plate or pole wall"

J-28.70
Detail C, dimension, 2" MAX. is revised to read: 1" MAX.

Detail D, dimension, 2" MAX. is revised to read: 1" MAX.

J-29.10
Galvanized Welded Wire Mesh detail, callout – "Drill and Tap for ¼" Diam. Cap Screw, 3 Places, @ 9" center, all 4 edges S.S. Screw, ASTM F593 and washer"

Is revised to read;

"*Drill and Tap ¼" (IN) Diam. x 1" (IN) Cap Screw with washer ~ space approx. 9" o.c. ~ Liberally coat threads with Anti-seize compound (TYP.)"

Add Boxed note: * Bolts, Nuts, and washers ~ ASTM F593 or A193 Type 304 or Type 316 Stainless Steel (S.S.)

J-29.15
Title, "Camera Pole Standard" is revised to read; "Camera Pole Standard Details"

J-29-16
Title, "Camera Pole Standard Details" is revised to read; "Camera Pole Details"

J-40.10
Sheet 2 of 2, Detail F, callout, "12 – 13 x 1 ½" S.S. PENTA HEAD BOLT AND 12" S. S. FLAT WASHER" is revised to read; "12 – 13 x 1 ½" S.S. PENTA HEAD BOLT AND 1/2" (IN) S. S. FLAT WASHER"

J-60.14
All references to J-16b (6x) are revised to read; J-60.11

J-90.10
Section B, callout, "Hardware Mounting Rack ~ S. S. 1-5/8" Slotted Channel" is revised to read: "Hardware Mounting Rack (Typ.) ~ Type 304 S. S. 1-5/8" Slotted Channel"

J-90.20
Section B, callout, "Hardware Mounting Rack (Typ.) ~ S. S. 1-5/8" Slotted Channel" is revised to read: "Hardware Mounting Rack (Typ.) ~ Type 304 S. S. 1-5/8" Slotted Channel"

K-80.10
Sign Installation (Fill Section), dimension, 6' TO 12' MIN. is revised to read: 12' MIN.

Sign Installation (Sidewalk and Curb Section), dimension, 6' TO 12' MIN. is revised to read: 12' MIN.

Sign Installation (Behind Traffic Barrier Section), Delete dimensions - 6' TO 12' MIN. and 6' MIN.

Sign with Supplemental Plaque Installation (Fill Section), dimension, 6' TO 12' MIN. is revised to read: 12' MIN.

Sign Installation (Ditch Section), dimension, 6' TO 12' MIN. is revised to read: 12' MIN. Delete dimension – 6' MIN.

K-80.30
In the NARROW BASE, END view, the reference to Std. Plan C-8e is revised to Std. Plan K-80.35

M-11.10
Layout, dimension (from stop bar to "X"), was – 23' is revised to read; 24'

M-20.30
Sheet 2, Plan View, One-Way Roadway Recessed Pavement Marker Details, ONE-WAY TRAFFIC arrow symbol, is revised to point in the opposite direction (towards the rpm)

The following are the Standard Plan numbers applicable at the time this project was advertised. The date shown with each plan number is the publication approval date shown in the lower right-hand corner of that plan. Standard Plans showing different dates shall not be used in this contract.

A-10.10-00.....8/7/07	A-30.35-00.....10/12/07	A-50.20-01….....9/22/09
A-10.20-00.....10/5/07	A-40.00-00.....8/11/09	A-50.30-00…...11/17/08
A-10.30-00.....10/5/07	A-40.10-03.....12/23/14	A-50.40-00…...11/17/08
A-20.10-00.....8/31/07	A-40.15-00.....8/11/09	A-60.10-03.....12/23/14
A-30.10-00.....11/8/07	A-40.20-03.....12/23/14	A-60.20-03.....12/23/14
	A-40.50-02.....12/23/14	A-60.30-00.....11/8/07
A-30.30-01.....6/16/11	A-50.10-00….....11/17/08	A-60.40-00.....8/31/07
B-5.20-01.....6/16/11	B-30.50-01.....4/26/12	B-75.20-01.....6/10/08
B-5.40-01.....6/16/11	B-30.70-03.....4/26/12	B-75.50-01.....6/10/08
B-5.60-01.....6/16/11	B-30.80-00.....6/8/06	B-75.60-00.....6/8/06
B-10.20-01.....2/7/12	B-30.90-01.....9/20/07	B-80.20-00.....6/8/06
B-10.40-00.....6/1/06	B-35.20-00.....6/8/06	B-80.40-00.....6/1/06

B-10.60-00.....6/8/06
B-15.20-01.....2/7/12
B-15.40-01.....2/7/12
B-15.60-01.....2/7/12
B-20.20-02.....3/16/12
B-20.40-03.....3/16/12
B-20.60-03.....3/15/12
B-25.20-01.....3/15/12
B-25.60-00.....6/1/06
B-30.10-01.....4/26/12
B-30.20-02.....4/26/12
B-30.30-01.....4/26/12
B-30.40-01.....4/26/12
B-35.40-00.....6/8/06
B-40.20-00.....6/1/06
B-40.40-01.....6/16/10
B-45.20-00.....6/1/06
B-45.40-00.....6/1/06
B-50.20-00.....6/1/06
B-55.20-00.....6/1/06
B-60.20-00.....6/8/06
B-60.40-00.....6/1/06
B-65.20-01.....4/26/12
B-65.40-00.....6/1/06
B-70.20-00.....6/1/06
B-70.60-00.....6/1/06
B-82.20-00.....6/1/06
B-85.10-01.....6/10/08
B-85.20-00.....6/1/06
B-85.30-00.....6/1/06
B-85.40-00.....6/8/06
B-85.50-01.....6/10/08
B-90.10-00.....6/8/06
B-90.20-00.....6/8/06
B-90.30-00.....6/8/06
B-90.40-00.....6/8/06
B-90.50-00.....6/8/06
B-95.20-01.....2/3/09
B-95.40-00.....6/8/06

C-1.....6/16/11
C-1a.....7/14/15
C-1b.....7/14/15
C-1c.....5/30/97
C-1d.....10/31/03
C-2.....1/6/00
C-2a.....6/21/06
C-2b.....6/21/06
C-2c.....6/21/06
C-2d.....6/21/06
C-2e.....6/21/06
C-2f.....3/14/97
C-2g.....7/27/01
C-2h.....3/28/97
C-2i.....3/28/97
C-2j.....6/12/98
C-2k.....7/27/01
C-2n.....7/27/01
C-2o.....7/13/01
C-2p.....10/31/03
C-3.....7/2/12
C-3a.....10/4/05
C-3b.....6/27/11
C-3c.....6/27/11
C-4b.....6/8/06
C-4e.....10/23/14
C-4f.....7/2/12
C-6.....5/30/97
C-6a.....10/14/09
C-6c.....1/6/00
C-6d.....5/30/97
C-6f.....7/25/97
C-7.....6/16/11
C-7a.....6/16/11
C-8.....2/10/09
C-8a.....7/25/97
C-8b.....6/27/11
C-8e.....2/21/07
C-8f.....6/30/04
C-10.....6/3/10
C-16a.....6/3/10
C-16b.....6/3/10
C-20.10-03.....7/14/15
C-20.14-03.....6/11/14
C-20.15-02.....6/11/14
C-20.18-02.....6/11/14
C-20.19-02.....6/11/14
C-20.40-05.....7/14/15
C-20.41-01.....7/14/15
C-20.42-05.....7/14/15
C-20.45.01.....7/2/12
C-22.14-03.....6/11/14
C-22.16-05.....7/14/15
C-22.40-04.....10/23/14
C-22.41-01.....10/23/14
C-22.45-01.....10/23/14
C-23.60-03.....6/11/14
C.24.10-01.....6/11/14
C-25.18-05.....7/14/15
C-25.20-06.....7/14/15
C-25.22-05.....7/14/15
C-25.26-03.....7/14/15
C-25.80-03.....6/11/14
C-40.14-02.....7/2/12
C-40.16-02.....7/2/12
C-40.18-02.....7/2/12
C-70.10-01.....6/17/14
C-75.10-01.....6/11/14
C-75.20-01.....6/11/14
C-75.30-01.....6/11/14
C-80.10-01.....6/11/14
C-80.20-01.....6/11/14
C-80.30-01.....6/11/14
C-80.40-01.....6/11/14
C-80.50-00.....4/8/12
C-85.10-00.....4/8/12
C-85.11-00.....4/8/12
C-85.14-01.....6/11/14
C-85.15-01.....6/30/14
C-85.16-01.....6/17/14
C-85-18-01.....6/11/14
C-85.20-01.....6/11/14
C-90.10-00.....7/3/08

D-2.04-00.....11/10/05
D-2.06-01.....1/6/09
D-2.08-00.....11/10/05
D-2.14-00.....11/10/05
D-2.16-00.....11/10/05
D-2.18-00.....11/10/05
D-2.20-00.....11/10/05
D-2.32-00.....11/10/05
D-2.34-01.....1/6/09
D-2.36-03.....6/11/14
D-2.42-00.....11/10/05
D-2.44-00.....11/10/05
D-2.60-00.....11/10/05
D-2.62-00.....11/10/05
D-2.46-01.....6/11/14

D-2.48-00.....11/10/05
D-2.64-01.....1/6/09
D-2.66-00.....11/10/05
D-2.68-00.....11/10/05
D-2.80-00.....11/10/05
D-2.82-00.....11/10/05
D-2.84-00.....11/10/05
D-2.86-00.....11/10/05
D-2.88-00.....11/10/05
D-2.92-00.....11/10/05
D-3.09-00.....5/17/12
D-3.10-01……5/29/13
D-3.11-03……6/11/14
D-3.15-02……6/10/13
D-3.16-02……5/29/13

D-3.17-01……...5/17/12
D-4.....12/11/98
D-6.....6/19/98
D-10.10-01.....12/2/08
D-10.15-01.....12/2/08
D-10.20-00.....7/8/08
D-10.25-00.....7/8/08
D-10.30-00.....7/8/08
D-10.35-00….....7/8/08
D-10.40-01.....12/2/08
D-10.45-01.....12/2/08
D-15.10-01.....12/2/08
D-15.20-02.....6/2/11
D-15.30-01.....12/02/08

E-1.....2/21/07
E-2.....5/29/98

E-4.....8/27/03
E-4a.....8/27/03

F-10.12-03.....6/11/14
F-10.16-00.....12/20/06
F-10.18-00.....6/27/11
F-10.40-02.....6/21/12
F-10.42-00.....1/23/07

F-10.62-02.....4/22/14
F-10.64-03….....4/22/14
F-30.10-03.....6/11/14
F-40.12-02.....6/20/13
F-40.14-02.....6/20/13

F-40.15-02.....6/20/13
F-40.16-02….....6/20/13
F-45.10-01.....6/21/12
F-80.10-03.....6/11/14

G-10.10-00.....9/20/07
G-20.10-02.....6/23/15
G-22.10-03.....7/10/15
G-24.10-00.....11/8/07
G-24.20-01.....2/7/12
G-24.30-01.....2/7/12
G-24.40-05.....6/23/15
G-24.50-03.....6/17/14

G-24.60-04.....6/23/15
G-25.10-04.....6/10/13
G-30.10-04.....6/23/15
G-50.10-02.....6/23/15
G-60.10-03.....6/18/15
G-60.20-02.....6/18/15
G-60.30-02.....6/18/15
G-70.10-03.....6/18/15

G-70.20-02.....6/10/13
G-70.30-02.....6/10/13
G-90.10-01……..5/11/11
G-90.20-03……..7/10/15
G-90.30-02……..3/22/13
G-90.40-01…....10/14/09
G-95.10-01.....6/2/11
G-95.20-02.....6/2/11
G-95.30-02.....6/2/11

H-10.10-00.....7/3/08
H-10.15-00.....7/3/08
H-30.10-00.....10/12/07

H-32.10-00.....9/20/07
H-60.10-01.....7/3/08
H-60.20-01.....7/3/08

H-70.10-01.....2/7/12
H-70.20-01.....2/16/12
H-70.30-02.....2/7/12

I-10.10-01.....8/11/09
I-30.10-02.....3/22/13
I-30.15-02.....3/22/13
I-30.16-00.....3/22/13
I-30.17-00.....3/22/13

I-30.20-00.....9/20/07
I-30.30-01.....6/10/13
I-30.40-01.....6/10/13
I-30.60-00….....5/29/13
I-40.10-00.....9/20/07

I-40.20-00.....9/20/07
I-50.20-01.....6/10/13
I-60.10-01.....6/10/13
I-60.20-01.....6/10/13
I-80.10-01.....8/11/09

J-10.....7/18/97
J-10.10-03…… 6/3/15
J-10.15-01.....6/11/14
J-10.16-00…….6/3/15
J-10.17-00…….6/3/15
J-10.18-00…….6/3/15
J-10.20-00…....6/3/15
J-10.21-00…....6/3/15
J-10.22-00.....5/29/13
J-15.10-01.....6/11/14
J-15.15-02……7/10/15
J-20.10-03.....6/30/14
J-20.11-02.....6/30/14
J-20.15-03.....6/30/14
J-20.16-02.....6/30/14
J-20.20-02.....5/20/13
J-20.26-01.....7/12/12
J-21.10-04.....6/30/14
J-21.15-01.....6/10/13
J-21.16-01.....6/10/13
J-21.17-01.....6/10/13
J-21.20-01.....6/10/13
J-22.15-02.....7/10/15
J-22.16-03.....7/10/15
J-26.10-02.…..3/15/12
J-26.15-01……...5/17/12
J-26.20-00……...6/11/14
J-27.10-00……...3/15/12
J-27.15-00……...3/15/12
J-28.10-01.....5/11/11
J-28.22-00.....8/07/07
J-28.24-01.....6/3/15
J-28.26-01.....12/02/08
J-28.30-03….....6/11/14
J-28.40-02.....6/11/14
J-28.42-01.....6/11/14
J-28.43-00.....6/11/14
J-28.45-02.....6/11/14
J-28.50-02.....6/2/11
J-28.60-01.....6/2/11
J-28.70-01.....5/11/11
J-29.10-00.....6/27/11
J-29.15-00.....6/27/11
J-29.16-01.....6/20/13
J-30.10-00….....6/18/15
J-40.10-03….....5/20/13
J-40.20-02….....6/11/14
J-40.30-03……...5/20/13
J-40.35-01……...5/29/13
J-40.36-01……..5/20/13
J-40.37-01……..5/20/13
J-40.38-01.....5/20/13
J-40.39-00……..5/20/13
J-40.40-00…….5/20/13
J-50.10-00……...6/3/11
J-50.11-00……...6/3/11
J-50.12-00…….…..6/3/11
J-50.15-00……...….6/3/11
J-50.16-01…….3/22/13
J-50.20-00……6/3/11
J-50.25-00……6/3/11
J-50.30-00……6/3/11
J-60.05-00…….....6/16/11
J-60.11-00….....5/20/13
J-60.12-00….....5/20/13
J-60.13-00….....6/16/10
J-60.14-00…….6/16/10
J-75.10-02…….7/10/15
J-75.20-01…….7/10/15
J-75.30-02…….7/10/15
J-75.40-01…….6/11/14
J-75.41-00…….6/11/14
J-75.45-01…….6/11/14
J-90.10-01…….6/27/11
J-90.20-01…….6/27/11
J-90.21-00…….6/30/14

K-70.20-00.....2/15/07
K-80.10-00.....2/21/07
K-80.20-00...12/20/06
K-80.30-00.....2/21/07
K-80.35-00.....2/21/07
K-80.37-00.....2/21/07

L-10.10-02.....6/21/12
L-20.10-03.....7/14/15
L-30.10-02.....6/11/14
L-40.10-02.....6/21/12
L-40.15-01.....6/16/11
L-40.20-02.....6/21/12
L-70.10-01.....5/21/08
L-70.20-01.....5/21/08

M-1.20-03.....6/24/14
M-1.40-02.....6/3/11
M-1.60-02.....6/3/11
M-1.80-03.....6/3/11
M-2.20-03.....7/10/15
M-9.60-00…….2./10/09
M-11.10-01.....1/30/07
M-15.10-01.....2/6/07
M-17.10-02.....7/3/08
M-20.10-02.....6/3/11
M-40.10-03.....6/24/14
M-40.20-00....10/12/07
M-40.30-00.....9/20/07
M-40.40-00.....9/20/07
M-40.50-00.....9/20/07

M-2.21-00…..7/10/15
M-3.10-03.....6/3/11
M-3.20-02.....6/3/11
M-3.30-03.....6/3/11
M-3.40-03.....6/3/11
M-3.50-02.....6/3/11
M-5.10-02.....6/3/11
M-7.50-0.....1/30/07
M-9.50-02.....6/24/14
M-20.20-02.....4/20/15
M-20.30-03.....4/20/15
M-20.40-03.....6/24/14
M-20.50-02.....6/3/11
M-24.20-02.....4/20/15
M-24.40-02.....4/20/15
M-24.50-00.....6/16/11
M-24.60-04.....6/24/14
M-40.60-00.....9/20/07
M-60.10-01.....6/3/11
M-60.20-02.....6/27/11
M-65.10-02.....5/11/11
M-80.10-01.....6/3/11
M-80.20-00.....6/10/08
M-80.30-00.....6/10/08

THIS PAGE INTENTIONALLY LEFT BLANK

ATTACHMENT A
PREVAILING WAGES

THIS PAGE INTENTIONALLY LEFT BLANK

State of Washington
Department of Labor & Industries

Prevailing Wage Section - Telephone 360-902-5335
PO Box 44540, Olympia, WA 98504-4540

Washington State Prevailing Wage

The PREVAILING WAGES listed here include both the hourly wage rate and the hourly rate of fringe benefits. On public works projects, worker's wage and benefit rates must add to not less than this total. A brief description of overtime calculation requirements are provided on the Benefit Code Key.

Journey Level Prevailing Wage Rates for the Effective Date: 4/8/2016

County	Trade	Job Classification	Wage	Holiday	Overtime	Note
Kitsap	Asbestos Abatement Workers	Journey Level	$43.95	5D	1H	
Kitsap	Boilermakers	Journey Level	$30.34		1	
Kitsap	Brick Mason	Journey Level	$52.82	5A	1M	
Kitsap	Brick Mason	Pointer-Caulker-Cleaner	$52.82	5A	1M	
Kitsap	Building Service Employees	Janitor	$9.47		1	
Kitsap	Building Service Employees	Shampooer	$9.47		1	
Kitsap	Building Service Employees	Waxer	$9.47		1	
Kitsap	Building Service Employees	Window Cleaner	$13.22		1	
Kitsap	Cabinet Makers (In Shop)	Journey Level	$23.72		1	
Kitsap	Carpenters	Acoustical Worker	$54.02	5D	4C	
Kitsap	Carpenters	Bridge, Dock And Wharf Carpenters	$54.02	5D	4C	
Kitsap	Carpenters	Carpenter	$54.02	5D	4C	
Kitsap	Carpenters	Carpenters on Stationary Tools	$54.15	5D	4C	
Kitsap	Carpenters	Creosoted Material	$54.12	5D	4C	
Kitsap	Carpenters	Floor Finisher	$54.02	5D	4C	
Kitsap	Carpenters	Floor Layer	$54.02	5D	4C	
Kitsap	Carpenters	Scaffold Erector	$54.02	5D	4C	
Kitsap	Cement Masons	Journey Level	$53.95	7A	1M	
Kitsap	Divers & Tenders	Diver	$107.22	5D	4C	8A
Kitsap	Divers & Tenders	Diver On Standby	$64.42	5D	4C	
Kitsap	Divers & Tenders	Diver Tender	$58.33	5D	4C	
Kitsap	Divers & Tenders	Surface Rcv & Rov Operator	$58.33	5D	4C	
Kitsap	Divers & Tenders	Surface Rcv & Rov Operator Tender	$54.27	5A	4C	
Kitsap	Dredge Workers	Assistant Engineer	$56.44	5D	3F	
Kitsap	Dredge Workers	Assistant Mate (Deckhand)	$56.00	5D	3F	
Kitsap	Dredge Workers	Boatmen	$56.44	5D	3F	
Kitsap	Dredge Workers	Engineer Welder	$57.51	5D	3F	
Kitsap	Dredge Workers	Leverman, Hydraulic	$58.67	5D	3F	

Kitsap	Dredge Workers	Mates	$56.44	5D	3F	
Kitsap	Dredge Workers	Oiler	$56.00	5D	3F	
Kitsap	Drywall Applicator	Journey Level	$54.02	5D	1H	
Kitsap	Drywall Tapers	Journey Level	$54.07	5P	1E	
Kitsap	Electrical Fixture Maintenance Workers	Journey Level	$31.74		1	
Kitsap	Electricians - Inside	Journey Level	$51.26		1	
Kitsap	Electricians - Motor Shop	Craftsman	$15.37		1	
Kitsap	Electricians - Motor Shop	Journey Level	$14.69		1	
Kitsap	Electricians - Powerline Construction	Cable Splicer	$74.92	5A	4D	
Kitsap	Electricians - Powerline Construction	Certified Line Welder	$65.71	5A	4D	
Kitsap	Electricians - Powerline Construction	Groundperson	$44.12	5A	4D	
Kitsap	Electricians - Powerline Construction	Heavy Line Equipment Operator	$65.71	5A	4D	
Kitsap	Electricians - Powerline Construction	Journey Level Lineperson	$65.71	5A	4D	
Kitsap	Electricians - Powerline Construction	Line Equipment Operator	$55.34	5A	4D	
Kitsap	Electricians - Powerline Construction	Pole Sprayer	$65.71	5A	4D	
Kitsap	Electricians - Powerline Construction	Powderperson	$49.16	5A	4D	
Kitsap	Electronic Technicians	Journey Level	$44.76	7E	1D	
Kitsap	Elevator Constructors	Mechanic	$85.45	7D	4A	
Kitsap	Elevator Constructors	Mechanic In Charge	$92.35	7D	4A	
Kitsap	Fabricated Precast Concrete Products	Journey Level - In-Factory Work Only	$13.50		1	
Kitsap	Fence Erectors	Fence Erector	$13.80		1	
Kitsap	Fence Erectors	Fence Laborer	$11.60		1	
Kitsap	Flaggers	Journey Level	$37.26	7A	3I	
Kitsap	Glaziers	Journey Level	$56.16	7L	1Y	
Kitsap	Heat & Frost Insulators And Asbestos Workers	Journeyman	$63.18	5J	1S	
Kitsap	Heating Equipment Mechanics	Journey Level	$72.83	7F	1E	
Kitsap	Hod Carriers & Mason Tenders	Journey Level	$45.32	7A	3I	
Kitsap	Industrial Power Vacuum Cleaner	Journey Level	$29.89		1	
Kitsap	Inland Boatmen	Boat Operator	$56.78	5B	1K	
Kitsap	Inland Boatmen	Cook	$53.30	5B	1K	
Kitsap	Inland Boatmen	Deckhand	$53.30	5B	1K	
Kitsap	Inland Boatmen	Deckhand Engineer	$54.32	5B	1K	
Kitsap	Inland Boatmen	Launch Operator	$55.57	5B	1K	
Kitsap	Inland Boatmen	Mate	$55.57	5B	1K	
Kitsap		Cleaner Operator, Foamer Operator	$9.73		1	

	Inspection/Cleaning/Sealing Of Sewer & Water Systems By Remote Control					
Kitsap	Inspection/Cleaning/Sealing Of Sewer & Water Systems By Remote Control	Grout Truck Operator	$11.48		1	
Kitsap	Inspection/Cleaning/Sealing Of Sewer & Water Systems By Remote Control	Head Operator	$12.78		1	
Kitsap	Inspection/Cleaning/Sealing Of Sewer & Water Systems By Remote Control	Tv Truck Operator	$24.17		1	
Kitsap	Insulation Applicators	Journey Level	$54.02	5D	4C	
Kitsap	Ironworkers	Journeyman	$63.53	7N	1O	
Kitsap	Laborers	Air, Gas Or Electric Vibrating Screed	$43.95	7A	3I	
Kitsap	Laborers	Airtrac Drill Operator	$45.32	7A	3I	
Kitsap	Laborers	Ballast Regular Machine	$43.95	7A	3I	
Kitsap	Laborers	Batch Weighman	$37.26	7A	3I	
Kitsap	Laborers	Brick Pavers	$43.95	7A	3I	
Kitsap	Laborers	Brush Cutter	$43.95	7A	3I	
Kitsap	Laborers	Brush Hog Feeder	$43.95	7A	3I	
Kitsap	Laborers	Burner	$43.95	7A	3I	
Kitsap	Laborers	Caisson Worker	$45.32	7A	3I	
Kitsap	Laborers	Carpenter Tender	$43.95	7A	3I	
Kitsap	Laborers	Caulker	$43.95	7A	3I	
Kitsap	Laborers	Cement Dumper-paving	$44.76	7A	3I	
Kitsap	Laborers	Cement Finisher Tender	$43.95	7A	3I	
Kitsap	Laborers	Change House Or Dry Shack	$43.95	7A	3I	
Kitsap	Laborers	Chipping Gun (under 30 Lbs.)	$43.95	7A	3I	
Kitsap	Laborers	Chipping Gun(30 Lbs. And Over)	$44.76	7A	3I	
Kitsap	Laborers	Choker Setter	$43.95	7A	3I	
Kitsap	Laborers	Chuck Tender	$43.95	7A	3I	
Kitsap	Laborers	Clary Power Spreader	$44.76	7A	3I	
Kitsap	Laborers	Clean-up Laborer	$43.95	7A	3I	
Kitsap	Laborers	Concrete Dumper/chute Operator	$44.76	7A	3I	
Kitsap	Laborers	Concrete Form Stripper	$43.95	7A	3I	
Kitsap	Laborers	Concrete Placement Crew	$44.76	7A	3I	
Kitsap	Laborers	Concrete Saw Operator/core Driller	$44.76	7A	3I	
Kitsap	Laborers	Crusher Feeder	$37.26	7A	3I	
Kitsap	Laborers	Curing Laborer	$43.95	7A	3I	
Kitsap	Laborers	Demolition: Wrecking & Moving (incl. Charred Material)	$43.95	7A	3I	
Kitsap	Laborers	Ditch Digger	$43.95	7A	3I	

Kitsap	Laborers	Diver	$45.32	7A	3I	
Kitsap	Laborers	Drill Operator (hydraulic,diamond)	$44.76	7A	3I	
Kitsap	Laborers	Dry Stack Walls	$43.95	7A	3I	
Kitsap	Laborers	Dump Person	$43.95	7A	3I	
Kitsap	Laborers	Epoxy Technician	$43.95	7A	3I	
Kitsap	Laborers	Erosion Control Worker	$43.95	7A	3I	
Kitsap	Laborers	Faller & Bucker Chain Saw	$44.76	7A	3I	
Kitsap	Laborers	Fine Graders	$43.95	7A	3I	
Kitsap	Laborers	Firewatch	$37.26	7A	3I	
Kitsap	Laborers	Form Setter	$43.95	7A	3I	
Kitsap	Laborers	Gabian Basket Builders	$43.95	7A	3I	
Kitsap	Laborers	General Laborer	$43.95	7A	3I	
Kitsap	Laborers	Grade Checker & Transit Person	$45.32	7A	3I	
Kitsap	Laborers	Grinders	$43.95	7A	3I	
Kitsap	Laborers	Grout Machine Tender	$43.95	7A	3I	
Kitsap	Laborers	Groutmen (pressure)including Post Tension Beams	$44.76	7A	3I	
Kitsap	Laborers	Guardrail Erector	$43.95	7A	3I	
Kitsap	Laborers	Hazardous Waste Worker (level A)	$45.32	7A	3I	
Kitsap	Laborers	Hazardous Waste Worker (level B)	$44.76	7A	3I	
Kitsap	Laborers	Hazardous Waste Worker (level C)	$43.95	7A	3I	
Kitsap	Laborers	High Scaler	$45.32	7A	3I	
Kitsap	Laborers	Jackhammer	$44.76	7A	3I	
Kitsap	Laborers	Laserbeam Operator	$44.76	7A	3I	
Kitsap	Laborers	Maintenance Person	$43.95	7A	3I	
Kitsap	Laborers	Manhole Builder-mudman	$44.76	7A	3I	
Kitsap	Laborers	Material Yard Person	$43.95	7A	3I	
Kitsap	Laborers	Motorman-dinky Locomotive	$44.76	7A	3I	
Kitsap	Laborers	Nozzleman (concrete Pump, Green Cutter When Using Combination Of High Pressure Air & Water On Concrete & Rock, Sandblast, Gunite, Shotcrete, Water Bla	$44.76	7A	3I	
Kitsap	Laborers	Pavement Breaker	$44.76	7A	3I	
Kitsap	Laborers	Pilot Car	$37.26	7A	3I	
Kitsap	Laborers	Pipe Layer Lead	$45.32	7A	3I	
Kitsap	Laborers	Pipe Layer/tailor	$44.76	7A	3I	
Kitsap	Laborers	Pipe Pot Tender	$44.76	7A	3I	
Kitsap	Laborers	Pipe Reliner	$44.76	7A	3I	
Kitsap	Laborers	Pipe Wrapper	$44.76	7A	3I	
Kitsap	Laborers	Pot Tender	$43.95	7A	3I	
Kitsap	Laborers	Powderman	$45.32	7A	3I	

Kitsap	Laborers	Powderman's Helper	$43.95	7A	3I	
Kitsap	Laborers	Power Jacks	$44.76	7A	3I	
Kitsap	Laborers	Railroad Spike Puller - Power	$44.76	7A	3I	
Kitsap	Laborers	Raker - Asphalt	$45.32	7A	3I	
Kitsap	Laborers	Re-timberman	$45.32	7A	3I	
Kitsap	Laborers	Remote Equipment Operator	$44.76	7A	3I	
Kitsap	Laborers	Rigger/signal Person	$44.76	7A	3I	
Kitsap	Laborers	Rip Rap Person	$43.95	7A	3I	
Kitsap	Laborers	Rivet Buster	$44.76	7A	3I	
Kitsap	Laborers	Rodder	$44.76	7A	3I	
Kitsap	Laborers	Scaffold Erector	$43.95	7A	3I	
Kitsap	Laborers	Scale Person	$43.95	7A	3I	
Kitsap	Laborers	Sloper (over 20")	$44.76	7A	3I	
Kitsap	Laborers	Sloper Sprayer	$43.95	7A	3I	
Kitsap	Laborers	Spreader (concrete)	$44.76	7A	3I	
Kitsap	Laborers	Stake Hopper	$43.95	7A	3I	
Kitsap	Laborers	Stock Piler	$43.95	7A	3I	
Kitsap	Laborers	Tamper & Similar Electric, Air & Gas Operated Tools	$44.76	7A	3I	
Kitsap	Laborers	Tamper (multiple & Self-propelled)	$44.76	7A	3I	
Kitsap	Laborers	Timber Person - Sewer (lagger, Shorer & Cribber)	$44.76	7A	3I	
Kitsap	Laborers	Toolroom Person (at Jobsite)	$43.95	7A	3I	
Kitsap	Laborers	Topper	$43.95	7A	3I	
Kitsap	Laborers	Track Laborer	$43.95	7A	3I	
Kitsap	Laborers	Track Liner (power)	$44.76	7A	3I	
Kitsap	Laborers	Traffic Control Laborer	$39.84	7A	3I	8R
Kitsap	Laborers	Traffic Control Supervisor	$39.84	7A	3I	8R
Kitsap	Laborers	Truck Spotter	$43.95	7A	3I	
Kitsap	Laborers	Tugger Operator	$44.76	7A	3I	
Kitsap	Laborers	Tunnel Work-Compressed Air Worker 0-30 psi	$74.29	7A	3I	8Q
Kitsap	Laborers	Tunnel Work-Compressed Air Worker 30.01-44.00 psi	$79.32	7A	3I	8Q
Kitsap	Laborers	Tunnel Work-Compressed Air Worker 44.01-54.00 psi	$83.00	7A	3I	8Q
Kitsap	Laborers	Tunnel Work-Compressed Air Worker 54.01-60.00 psi	$88.70	7A	3I	8Q
Kitsap	Laborers	Tunnel Work-Compressed Air Worker 60.01-64.00 psi	$90.82	7A	3I	8Q
Kitsap	Laborers	Tunnel Work-Compressed Air Worker 64.01-68.00 psi	$95.92	7A	3I	8Q
Kitsap	Laborers	Tunnel Work-Compressed Air Worker 68.01-70.00 psi	$97.82	7A	3I	8Q
Kitsap	Laborers	Tunnel Work-Compressed Air Worker 70.01-72.00 psi	$99.82	7A	3I	8Q
Kitsap	Laborers		$101.82	7A	3I	8Q

		Tunnel Work-Compressed Air Worker 72.01-74.00 psi				
Kitsap	Laborers	Tunnel Work-Guage and Lock Tender	$45.42	7A	3I	8Q
Kitsap	Laborers	Tunnel Work-Miner	$45.42	7A	3I	8Q
Kitsap	Laborers	Vibrator	$44.76	7A	3I	
Kitsap	Laborers	Vinyl Seamer	$43.95	7A	3I	
Kitsap	Laborers	Watchman	$33.86	7A	3I	
Kitsap	Laborers	Welder	$44.76	7A	3I	
Kitsap	Laborers	Well Point Laborer	$44.76	7A	3I	
Kitsap	Laborers	Window Washer/cleaner	$33.86	7A	3I	
Kitsap	Laborers - Underground Sewer & Water	General Laborer & Topman	$43.95	7A	3I	
Kitsap	Laborers - Underground Sewer & Water	Pipe Layer	$44.76	7A	3I	
Kitsap	Landscape Construction	Irrigation Or Lawn Sprinkler Installers	$9.47		1	
Kitsap	Landscape Construction	Landscape Equipment Operators Or Truck Drivers	$10.05		1	
Kitsap	Landscape Construction	Landscaping Or Planting Laborers	$12.92		1	
Kitsap	Lathers	JOURNEY LEVEL	$21.00		1	
Kitsap	Marble Setters	Journey Level	$52.82	5A	1M	
Kitsap	Metal Fabrication (In Shop)	Fitter	$26.96		1	
Kitsap	Metal Fabrication (In Shop)	Laborer	$9.47		1	
Kitsap	Metal Fabrication (In Shop)	Machine Operator	$13.83		1	
Kitsap	Metal Fabrication (In Shop)	Welder	$13.83		1	
Kitsap	Millwright	Journey Level	$44.89		1	
Kitsap	Modular Buildings	Cabinet Assembly	$11.56		1	
Kitsap	Modular Buildings	Electrician	$11.56		1	
Kitsap	Modular Buildings	Equipment Maintenance	$11.56		1	
Kitsap	Modular Buildings	Plumber	$11.56		1	
Kitsap	Modular Buildings	Production Worker	$9.47		1	
Kitsap	Modular Buildings	Tool Maintenance	$11.56		1	
Kitsap	Modular Buildings	Utility Person	$11.56		1	
Kitsap	Modular Buildings	Welder	$11.56		1	
Kitsap	Painters	Journey Level	$39.35	6Z	2B	
Kitsap	Pile Driver	Journey Level	$54.27	5D	4C	
Kitsap	Plasterers	Journey Level	$51.68	7Q	1R	
Kitsap	Playground & Park Equipment Installers	Journey Level	$9.47		1	
Kitsap	Plumbers & Pipefitters	Journey Level	$65.52	5A	1G	
Kitsap	Power Equipment Operators	Asphalt Plant Operators	$56.94	7A	3C	8P
Kitsap	Power Equipment Operators	Assistant Engineer	$53.57	7A	3C	8P
Kitsap	Power Equipment Operators	Barrier Machine (zipper)	$56.44	7A	3C	8P
Kitsap	Power Equipment Operators	Batch Plant Operator, Concrete	$56.44	7A	3C	8P

Kitsap	Power Equipment Operators	Bobcat	$53.57	7A	3C	8P
Kitsap	Power Equipment Operators	Brokk - Remote Demolition Equipment	$53.57	7A	3C	8P
Kitsap	Power Equipment Operators	Brooms	$53.57	7A	3C	8P
Kitsap	Power Equipment Operators	Bump Cutter	$56.44	7A	3C	8P
Kitsap	Power Equipment Operators	Cableways	$56.94	7A	3C	8P
Kitsap	Power Equipment Operators	Chipper	$56.44	7A	3C	8P
Kitsap	Power Equipment Operators	Compressor	$53.57	7A	3C	8P
Kitsap	Power Equipment Operators	Concrete Pump: Truck Mount With Boom Attachment Over 42 M	$56.94	7A	3C	8P
Kitsap	Power Equipment Operators	Concrete Finish Machine -laser Screed	$53.57	7A	3C	8P
Kitsap	Power Equipment Operators	Concrete Pump - Mounted Or Trailer High Pressure Line Pump, Pump High Pressure.	$56.00	7A	3C	8P
Kitsap	Power Equipment Operators	Concrete Pump: Truck Mount With Boom Attachment Up To 42m	$56.44	7A	3C	8P
Kitsap	Power Equipment Operators	Conveyors	$56.00	7A	3C	8P
Kitsap	Power Equipment Operators	Cranes Friction: 200 tons and over	$58.67	7A	3C	8P
Kitsap	Power Equipment Operators	Cranes: 20 Tons Through 44 Tons With Attachments	$56.44	7A	3C	8P
Kitsap	Power Equipment Operators	Cranes: 100 Tons Through 199 Tons, Or 150' Of Boom (Including Jib With Attachments)	$57.51	7A	3C	8P
Kitsap	Power Equipment Operators	Cranes: 200 tons- 299 tons, or 250’ of boom including jib with attachments	$58.10	7A	3C	8P
Kitsap	Power Equipment Operators	Cranes: 300 tons and over or 300’ of boom including jib with attachments	$58.67	7A	3C	8P
Kitsap	Power Equipment Operators	Cranes: 45 Tons Through 99 Tons, Under 150' Of Boom (including Jib With Attachments)	$56.94	7A	3C	8P
Kitsap	Power Equipment Operators	Cranes: A-frame - 10 Tons And Under	$53.57	7A	3C	8P
Kitsap	Power Equipment Operators	Cranes: Friction cranes through 199 tons	$58.10	7A	3C	8P
Kitsap	Power Equipment Operators	Cranes: Through 19 Tons With Attachments A-frame Over 10 Tons	$56.00	7A	3C	8P
Kitsap	Power Equipment Operators	Crusher	$56.44	7A	3C	8P
Kitsap	Power Equipment Operators	Deck Engineer/deck Winches (power)	$56.44	7A	3C	8P
Kitsap	Power Equipment Operators	Derricks, On Building Work	$56.94	7A	3C	8P
Kitsap	Power Equipment Operators	Dozers D-9 & Under	$56.00	7A	3C	8P
Kitsap	Power Equipment Operators		$56.00	7A	3C	8P

		Drill Oilers: Auger Type, Truck Or Crane Mount				
Kitsap	Power Equipment Operators	Drilling Machine	$57.51	7A	3C	8P
Kitsap	Power Equipment Operators	Elevator And Man-lift: Permanent And Shaft Type	$53.57	7A	3C	8P
Kitsap	Power Equipment Operators	Finishing Machine, Bidwell And Gamaco & Similar Equipment	$56.44	7A	3C	8P
Kitsap	Power Equipment Operators	Forklift: 3000 Lbs And Over With Attachments	$56.00	7A	3C	8P
Kitsap	Power Equipment Operators	Forklifts: Under 3000 Lbs. With Attachments	$53.57	7A	3C	8P
Kitsap	Power Equipment Operators	Grade Engineer: Using Blue Prints, Cut Sheets, Etc	$56.44	7A	3C	8P
Kitsap	Power Equipment Operators	Gradechecker/stakeman	$53.57	7A	3C	8P
Kitsap	Power Equipment Operators	Guardrail Punch	$56.44	7A	3C	8P
Kitsap	Power Equipment Operators	Hard Tail End Dump Articulating Off- Road Equipment 45 Yards. & Over	$56.94	7A	3C	8P
Kitsap	Power Equipment Operators	Hard Tail End Dump Articulating Off-road Equipment Under 45 Yards	$56.44	7A	3C	8P
Kitsap	Power Equipment Operators	Horizontal/directional Drill Locator	$56.00	7A	3C	8P
Kitsap	Power Equipment Operators	Horizontal/directional Drill Operator	$56.44	7A	3C	8P
Kitsap	Power Equipment Operators	Hydralifts/boom Trucks Over 10 Tons	$56.00	7A	3C	8P
Kitsap	Power Equipment Operators	Hydralifts/boom Trucks, 10 Tons And Under	$53.57	7A	3C	8P
Kitsap	Power Equipment Operators	Loader, Overhead 8 Yards. & Over	$57.51	7A	3C	8P
Kitsap	Power Equipment Operators	Loader, Overhead, 6 Yards. But Not Including 8 Yards	$56.94	7A	3C	8P
Kitsap	Power Equipment Operators	Loaders, Overhead Under 6 Yards	$56.44	7A	3C	8P
Kitsap	Power Equipment Operators	Loaders, Plant Feed	$56.44	7A	3C	8P
Kitsap	Power Equipment Operators	Loaders: Elevating Type Belt	$56.00	7A	3C	8P
Kitsap	Power Equipment Operators	Locomotives, All	$56.44	7A	3C	8P
Kitsap	Power Equipment Operators	Material Transfer Device	$56.44	7A	3C	8P
Kitsap	Power Equipment Operators	Mechanics, All (leadmen - $0.50 Per Hour Over Mechanic)	$57.51	7A	3C	8P
Kitsap	Power Equipment Operators	Motor Patrol Graders	$56.94	7A	3C	8P
Kitsap	Power Equipment Operators	Mucking Machine, Mole, Tunnel Drill, Boring, Road Header And/or Shield	$56.94	7A	3C	8P
Kitsap	Power Equipment Operators	Oil Distributors, Blower Distribution & Mulch Seeding Operator	$53.57	7A	3C	8P
Kitsap	Power Equipment Operators		$56.00	7A	3C	8P

		Outside Hoists (elevators And Manlifts), Air Tuggers,strato				
Kitsap	Power Equipment Operators	Overhead, Bridge Type Crane: 20 Tons Through 44 Tons	$56.44	7A	3C	8P
Kitsap	Power Equipment Operators	Overhead, Bridge Type: 100 Tons And Over	$57.51	7A	3C	8P
Kitsap	Power Equipment Operators	Overhead, Bridge Type: 45 Tons Through 99 Tons	$56.94	7A	3C	8P
Kitsap	Power Equipment Operators	Pavement Breaker	$53.57	7A	3C	8P
Kitsap	Power Equipment Operators	Pile Driver (other Than Crane Mount)	$56.44	7A	3C	8P
Kitsap	Power Equipment Operators	Plant Oiler - Asphalt, Crusher	$56.00	7A	3C	8P
Kitsap	Power Equipment Operators	Posthole Digger, Mechanical	$53.57	7A	3C	8P
Kitsap	Power Equipment Operators	Power Plant	$53.57	7A	3C	8P
Kitsap	Power Equipment Operators	Pumps - Water	$53.57	7A	3C	8P
Kitsap	Power Equipment Operators	Quad 9, Hd 41, D10 And Over	$56.94	7A	3C	8P
Kitsap	Power Equipment Operators	Quick Tower - No Cab, Under 100 Feet In Height Based To Boom	$53.57	7A	3C	8P
Kitsap	Power Equipment Operators	Remote Control Operator On Rubber Tired Earth Moving Equipment	$56.94	7A	3C	8P
Kitsap	Power Equipment Operators	Rigger And Bellman	$53.57	7A	3C	8P
Kitsap	Power Equipment Operators	Rigger/Signal Person, Bellman (Certified)	$56.00	7A	3C	8P
Kitsap	Power Equipment Operators	Rollagon	$56.94	7A	3C	8P
Kitsap	Power Equipment Operators	Roller, Other Than Plant Mix	$53.57	7A	3C	8P
Kitsap	Power Equipment Operators	Roller, Plant Mix Or Multi-lift Materials	$56.00	7A	3C	8P
Kitsap	Power Equipment Operators	Roto-mill, Roto-grinder	$56.44	7A	3C	8P
Kitsap	Power Equipment Operators	Saws - Concrete	$56.00	7A	3C	8P
Kitsap	Power Equipment Operators	Scraper, Self Propelled Under 45 Yards	$56.44	7A	3C	8P
Kitsap	Power Equipment Operators	Scrapers - Concrete & Carry All	$56.00	7A	3C	8P
Kitsap	Power Equipment Operators	Scrapers, Self-propelled: 45 Yards And Over	$56.94	7A	3C	8P
Kitsap	Power Equipment Operators	Service Engineers - Equipment	$56.00	7A	3C	8P
Kitsap	Power Equipment Operators	Shotcrete/gunite Equipment	$53.57	7A	3C	8P
Kitsap	Power Equipment Operators	Shovel , Excavator, Backhoe, Tractors Under 15 Metric Tons.	$56.00	7A	3C	8P
Kitsap	Power Equipment Operators	Shovel, Excavator, Backhoe: Over 30 Metric Tons To 50 Metric Tons	$56.94	7A	3C	8P
Kitsap	Power Equipment Operators	Shovel, Excavator, Backhoes, Tractors: 15 To 30 Metric Tons	$56.44	7A	3C	8P
Kitsap	Power Equipment Operators	Shovel, Excavator, Backhoes: Over 50 Metric Tons To 90 Metric Tons	$57.51	7A	3C	8P

Kitsap	Power Equipment Operators	Shovel, Excavator, Backhoes: Over 90 Metric Tons	$58.10	7A	3C	8P
Kitsap	Power Equipment Operators	Slipform Pavers	$56.94	7A	3C	8P
Kitsap	Power Equipment Operators	Spreader, Topsider & Screedman	$56.94	7A	3C	8P
Kitsap	Power Equipment Operators	Subgrader Trimmer	$56.44	7A	3C	8P
Kitsap	Power Equipment Operators	Tower Bucket Elevators	$56.00	7A	3C	8P
Kitsap	Power Equipment Operators	Tower Crane Up To 175' In Height Base To Boom	$57.51	7A	3C	8P
Kitsap	Power Equipment Operators	Tower Crane: over 175' through 250' in height, base to boom	$58.10	7A	3C	8P
Kitsap	Power Equipment Operators	Tower Cranes: over 250' in height from base to boom	$58.67	7A	3C	8P
Kitsap	Power Equipment Operators	Transporters, All Track Or Truck Type	$56.94	7A	3C	8P
Kitsap	Power Equipment Operators	Trenching Machines	$56.00	7A	3C	8P
Kitsap	Power Equipment Operators	Truck Crane Oiler/driver - 100 Tons And Over	$56.44	7A	3C	8P
Kitsap	Power Equipment Operators	Truck Crane Oiler/driver Under 100 Tons	$56.00	7A	3C	8P
Kitsap	Power Equipment Operators	Truck Mount Portable Conveyor	$56.44	7A	3C	8P
Kitsap	Power Equipment Operators	Welder	$56.94	7A	3C	8P
Kitsap	Power Equipment Operators	Wheel Tractors, Farmall Type	$53.57	7A	3C	8P
Kitsap	Power Equipment Operators	Yo Yo Pay Dozer	$56.44	7A	3C	8P
Kitsap	Power Equipment Operators-Underground Sewer & Water	Asphalt Plant Operators	$56.94	7A	3C	8P
Kitsap	Power Equipment Operators-Underground Sewer & Water	Assistant Engineer	$53.57	7A	3C	8P
Kitsap	Power Equipment Operators-Underground Sewer & Water	Barrier Machine (zipper)	$56.44	7A	3C	8P
Kitsap	Power Equipment Operators-Underground Sewer & Water	Batch Plant Operator, Concrete	$56.44	7A	3C	8P
Kitsap	Power Equipment Operators-Underground Sewer & Water	Bobcat	$53.57	7A	3C	8P
Kitsap	Power Equipment Operators-Underground Sewer & Water	Brokk - Remote Demolition Equipment	$53.57	7A	3C	8P
Kitsap	Power Equipment Operators-Underground Sewer & Water	Brooms	$53.57	7A	3C	8P
Kitsap	Power Equipment Operators-Underground Sewer & Water	Bump Cutter	$56.44	7A	3C	8P
Kitsap	Power Equipment Operators-Underground Sewer & Water	Cableways	$56.94	7A	3C	8P
Kitsap	Power Equipment Operators-Underground Sewer & Water	Chipper	$56.44	7A	3C	8P
Kitsap	Power Equipment Operators-Underground Sewer & Water	Compressor	$53.57	7A	3C	8P
Kitsap	Power Equipment Operators-Underground Sewer & Water		$56.94	7A	3C	8P

		Concrete Pump: Truck Mount With Boom Attachment Over 42 M				
Kitsap	Power Equipment Operators-Underground Sewer & Water	Concrete Finish Machine -laser Screed	$53.57	7A	3C	8P
Kitsap	Power Equipment Operators-Underground Sewer & Water	Concrete Pump - Mounted Or Trailer High Pressure Line Pump, Pump High Pressure.	$56.00	7A	3C	8P
Kitsap	Power Equipment Operators-Underground Sewer & Water	Concrete Pump: Truck Mount With Boom Attachment Up To 42m	$56.44	7A	3C	8P
Kitsap	Power Equipment Operators-Underground Sewer & Water	Conveyors	$56.00	7A	3C	8P
Kitsap	Power Equipment Operators-Underground Sewer & Water	Cranes Friction: 200 tons and over	$58.67	7A	3C	8P
Kitsap	Power Equipment Operators-Underground Sewer & Water	Cranes: 20 Tons Through 44 Tons With Attachments	$56.44	7A	3C	8P
Kitsap	Power Equipment Operators-Underground Sewer & Water	Cranes: 100 Tons Through 199 Tons, Or 150' Of Boom (Including Jib With Attachments)	$57.51	7A	3C	8P
Kitsap	Power Equipment Operators-Underground Sewer & Water	Cranes: 200 tons- 299 tons, or 250’ of boom including jib with attachments	$58.10	7A	3C	8P
Kitsap	Power Equipment Operators-Underground Sewer & Water	Cranes: 300 tons and over or 300’ of boom including jib with attachments	$58.67	7A	3C	8P
Kitsap	Power Equipment Operators-Underground Sewer & Water	Cranes: 45 Tons Through 99 Tons, Under 150' Of Boom (including Jib With Attachments)	$56.94	7A	3C	8P
Kitsap	Power Equipment Operators-Underground Sewer & Water	Cranes: A-frame - 10 Tons And Under	$53.57	7A	3C	8P
Kitsap	Power Equipment Operators-Underground Sewer & Water	Cranes: Friction cranes through 199 tons	$58.10	7A	3C	8P
Kitsap	Power Equipment Operators-Underground Sewer & Water	Cranes: Through 19 Tons With Attachments A-frame Over 10 Tons	$56.00	7A	3C	8P
Kitsap	Power Equipment Operators-Underground Sewer & Water	Crusher	$56.44	7A	3C	8P
Kitsap	Power Equipment Operators-Underground Sewer & Water	Deck Engineer/deck Winches (power)	$56.44	7A	3C	8P
Kitsap	Power Equipment Operators-Underground Sewer & Water	Derricks, On Building Work	$56.94	7A	3C	8P
Kitsap	Power Equipment Operators-Underground Sewer & Water	Dozers D-9 & Under	$56.00	7A	3C	8P
Kitsap	Power Equipment Operators-Underground Sewer & Water	Drill Oilers: Auger Type, Truck Or Crane Mount	$56.00	7A	3C	8P
Kitsap	Power Equipment Operators-Underground Sewer & Water	Drilling Machine	$57.51	7A	3C	8P
Kitsap	Power Equipment Operators-Underground Sewer & Water	Elevator And Man-lift: Permanent And Shaft Type	$53.57	7A	3C	8P

Kitsap	Power Equipment Operators-Underground Sewer & Water	Finishing Machine, Bidwell And Gamaco & Similar Equipment	$56.44	7A	3C	8P
Kitsap	Power Equipment Operators-Underground Sewer & Water	Forklift: 3000 Lbs And Over With Attachments	$56.00	7A	3C	8P
Kitsap	Power Equipment Operators-Underground Sewer & Water	Forklifts: Under 3000 Lbs. With Attachments	$53.57	7A	3C	8P
Kitsap	Power Equipment Operators-Underground Sewer & Water	Grade Engineer: Using Blue Prints, Cut Sheets, Etc	$56.44	7A	3C	8P
Kitsap	Power Equipment Operators-Underground Sewer & Water	Gradechecker/stakeman	$53.57	7A	3C	8P
Kitsap	Power Equipment Operators-Underground Sewer & Water	Guardrail Punch	$56.44	7A	3C	8P
Kitsap	Power Equipment Operators-Underground Sewer & Water	Hard Tail End Dump Articulating Off- Road Equipment 45 Yards. & Over	$56.94	7A	3C	8P
Kitsap	Power Equipment Operators-Underground Sewer & Water	Hard Tail End Dump Articulating Off-road Equipment Under 45 Yards	$56.44	7A	3C	8P
Kitsap	Power Equipment Operators-Underground Sewer & Water	Horizontal/directional Drill Locator	$56.00	7A	3C	8P
Kitsap	Power Equipment Operators-Underground Sewer & Water	Horizontal/directional Drill Operator	$56.44	7A	3C	8P
Kitsap	Power Equipment Operators-Underground Sewer & Water	Hydralifts/boom Trucks Over 10 Tons	$56.00	7A	3C	8P
Kitsap	Power Equipment Operators-Underground Sewer & Water	Hydralifts/boom Trucks, 10 Tons And Under	$53.57	7A	3C	8P
Kitsap	Power Equipment Operators-Underground Sewer & Water	Loader, Overhead 8 Yards. & Over	$57.51	7A	3C	8P
Kitsap	Power Equipment Operators-Underground Sewer & Water	Loader, Overhead, 6 Yards. But Not Including 8 Yards	$56.94	7A	3C	8P
Kitsap	Power Equipment Operators-Underground Sewer & Water	Loaders, Overhead Under 6 Yards	$56.44	7A	3C	8P
Kitsap	Power Equipment Operators-Underground Sewer & Water	Loaders, Plant Feed	$56.44	7A	3C	8P
Kitsap	Power Equipment Operators-Underground Sewer & Water	Loaders: Elevating Type Belt	$56.00	7A	3C	8P
Kitsap	Power Equipment Operators-Underground Sewer & Water	Locomotives, All	$56.44	7A	3C	8P
Kitsap	Power Equipment Operators-Underground Sewer & Water	Material Transfer Device	$56.44	7A	3C	8P
Kitsap	Power Equipment Operators-Underground Sewer & Water	Mechanics, All (leadmen - $0.50 Per Hour Over Mechanic)	$57.51	7A	3C	8P
Kitsap	Power Equipment Operators-Underground Sewer & Water	Motor Patrol Graders	$56.94	7A	3C	8P
Kitsap	Power Equipment Operators-Underground Sewer & Water	Mucking Machine, Mole, Tunnel Drill, Boring, Road Header And/or Shield	$56.94	7A	3C	8P
Kitsap	Power Equipment Operators-Underground Sewer & Water	Oil Distributors, Blower Distribution & Mulch Seeding Operator	$53.57	7A	3C	8P

Kitsap	Power Equipment Operators-Underground Sewer & Water	Outside Hoists (elevators And Manlifts), Air Tuggers,strato	$56.00	7A	3C	8P
Kitsap	Power Equipment Operators-Underground Sewer & Water	Overhead, Bridge Type Crane: 20 Tons Through 44 Tons	$56.44	7A	3C	8P
Kitsap	Power Equipment Operators-Underground Sewer & Water	Overhead, Bridge Type: 100 Tons And Over	$57.51	7A	3C	8P
Kitsap	Power Equipment Operators-Underground Sewer & Water	Overhead, Bridge Type: 45 Tons Through 99 Tons	$56.94	7A	3C	8P
Kitsap	Power Equipment Operators-Underground Sewer & Water	Pavement Breaker	$53.57	7A	3C	8P
Kitsap	Power Equipment Operators-Underground Sewer & Water	Pile Driver (other Than Crane Mount)	$56.44	7A	3C	8P
Kitsap	Power Equipment Operators-Underground Sewer & Water	Plant Oiler - Asphalt, Crusher	$56.00	7A	3C	8P
Kitsap	Power Equipment Operators-Underground Sewer & Water	Posthole Digger, Mechanical	$53.57	7A	3C	8P
Kitsap	Power Equipment Operators-Underground Sewer & Water	Power Plant	$53.57	7A	3C	8P
Kitsap	Power Equipment Operators-Underground Sewer & Water	Pumps - Water	$53.57	7A	3C	8P
Kitsap	Power Equipment Operators-Underground Sewer & Water	Quad 9, Hd 41, D10 And Over	$56.94	7A	3C	8P
Kitsap	Power Equipment Operators-Underground Sewer & Water	Quick Tower - No Cab, Under 100 Feet In Height Based To Boom	$53.57	7A	3C	8P
Kitsap	Power Equipment Operators-Underground Sewer & Water	Remote Control Operator On Rubber Tired Earth Moving Equipment	$56.94	7A	3C	8P
Kitsap	Power Equipment Operators-Underground Sewer & Water	Rigger And Bellman	$53.57	7A	3C	8P
Kitsap	Power Equipment Operators-Underground Sewer & Water	Rigger/Signal Person, Bellman (Certified)	$56.00	7A	3C	8P
Kitsap	Power Equipment Operators-Underground Sewer & Water	Rollagon	$56.94	7A	3C	8P
Kitsap	Power Equipment Operators-Underground Sewer & Water	Roller, Other Than Plant Mix	$53.57	7A	3C	8P
Kitsap	Power Equipment Operators-Underground Sewer & Water	Roller, Plant Mix Or Multi-lift Materials	$56.00	7A	3C	8P
Kitsap	Power Equipment Operators-Underground Sewer & Water	Roto-mill, Roto-grinder	$56.44	7A	3C	8P
Kitsap	Power Equipment Operators-Underground Sewer & Water	Saws - Concrete	$56.00	7A	3C	8P
Kitsap	Power Equipment Operators-Underground Sewer & Water	Scraper, Self Propelled Under 45 Yards	$56.44	7A	3C	8P
Kitsap	Power Equipment Operators-Underground Sewer & Water	Scrapers - Concrete & Carry All	$56.00	7A	3C	8P
Kitsap	Power Equipment Operators-Underground Sewer & Water	Scrapers, Self-propelled: 45 Yards And Over	$56.94	7A	3C	8P
Kitsap	Power Equipment Operators-Underground Sewer & Water	Service Engineers - Equipment	$56.00	7A	3C	8P
Kitsap		Shotcrete/gunite Equipment	$53.57	7A	3C	8P

	Power Equipment Operators-Underground Sewer & Water					
Kitsap	Power Equipment Operators-Underground Sewer & Water	Shovel , Excavator, Backhoe, Tractors Under 15 Metric Tons.	$56.00	7A	3C	8P
Kitsap	Power Equipment Operators-Underground Sewer & Water	Shovel, Excavator, Backhoe: Over 30 Metric Tons To 50 Metric Tons	$56.94	7A	3C	8P
Kitsap	Power Equipment Operators-Underground Sewer & Water	Shovel, Excavator, Backhoes, Tractors: 15 To 30 Metric Tons	$56.44	7A	3C	8P
Kitsap	Power Equipment Operators-Underground Sewer & Water	Shovel, Excavator, Backhoes: Over 50 Metric Tons To 90 Metric Tons	$57.51	7A	3C	8P
Kitsap	Power Equipment Operators-Underground Sewer & Water	Shovel, Excavator, Backhoes: Over 90 Metric Tons	$58.10	7A	3C	8P
Kitsap	Power Equipment Operators-Underground Sewer & Water	Slipform Pavers	$56.94	7A	3C	8P
Kitsap	Power Equipment Operators-Underground Sewer & Water	Spreader, Topsider & Screedman	$56.94	7A	3C	8P
Kitsap	Power Equipment Operators-Underground Sewer & Water	Subgrader Trimmer	$56.44	7A	3C	8P
Kitsap	Power Equipment Operators-Underground Sewer & Water	Tower Bucket Elevators	$56.00	7A	3C	8P
Kitsap	Power Equipment Operators-Underground Sewer & Water	Tower Crane Up To 175' In Height Base To Boom	$57.51	7A	3C	8P
Kitsap	Power Equipment Operators-Underground Sewer & Water	Tower Crane: over 175’ through 250’ in height, base to boom	$58.10	7A	3C	8P
Kitsap	Power Equipment Operators-Underground Sewer & Water	Tower Cranes: over 250’ in height from base to boom	$58.67	7A	3C	8P
Kitsap	Power Equipment Operators-Underground Sewer & Water	Transporters, All Track Or Truck Type	$56.94	7A	3C	8P
Kitsap	Power Equipment Operators-Underground Sewer & Water	Trenching Machines	$56.00	7A	3C	8P
Kitsap	Power Equipment Operators-Underground Sewer & Water	Truck Crane Oiler/driver - 100 Tons And Over	$56.44	7A	3C	8P
Kitsap	Power Equipment Operators-Underground Sewer & Water	Truck Crane Oiler/driver Under 100 Tons	$56.00	7A	3C	8P
Kitsap	Power Equipment Operators-Underground Sewer & Water	Truck Mount Portable Conveyor	$56.44	7A	3C	8P
Kitsap	Power Equipment Operators-Underground Sewer & Water	Welder	$56.94	7A	3C	8P
Kitsap	Power Equipment Operators-Underground Sewer & Water	Wheel Tractors, Farmall Type	$53.57	7A	3C	8P
Kitsap	Power Equipment Operators-Underground Sewer & Water	Yo Yo Pay Dozer	$56.44	7A	3C	8P
Kitsap	Power Line Clearance Tree Trimmers	Journey Level In Charge	$45.75	5A	4A	
Kitsap	Power Line Clearance Tree Trimmers	Spray Person	$43.38	5A	4A	
Kitsap	Power Line Clearance Tree Trimmers	Tree Equipment Operator	$45.75	5A	4A	

Kitsap	Power Line Clearance Tree Trimmers	Tree Trimmer	$40.84	5A	4A	
Kitsap	Power Line Clearance Tree Trimmers	Tree Trimmer Groundperson	$30.74	5A	4A	
Kitsap	Refrigeration & Air Conditioning Mechanics	Mechanic	$65.52	5A	1G	
Kitsap	Residential Brick Mason	Journey Level	$17.04		1	
Kitsap	Residential Carpenters	Journey Level	$40.66	5D	4C	
Kitsap	Residential Cement Masons	Journey Level	$30.87		1	
Kitsap	Residential Drywall Applicators	Journey Level	$40.64	5D	4C	
Kitsap	Residential Drywall Tapers	Journey Level	$20.00		1	
Kitsap	Residential Electricians	Journey Level	$27.00		1	
Kitsap	Residential Glaziers	Journey Level	$56.16	7L	1Y	
Kitsap	Residential Insulation Applicators	Journey Level	$13.96		1	
Kitsap	Residential Laborers	Journey Level	$16.89		1	
Kitsap	Residential Marble Setters	Journey Level	$17.04		1	
Kitsap	Residential Painters	Journey Level	$19.52		1	
Kitsap	Residential Plumbers & Pipefitters	Journey Level	$21.11		1	
Kitsap	Residential Refrigeration & Air Conditioning Mechanics	Journey Level	$17.64		1	
Kitsap	Residential Sheet Metal Workers	Journey Level (Field or Shop)	$28.95		1	
Kitsap	Residential Soft Floor Layers	Journey Level	$19.38		1	
Kitsap	Residential Sprinkler Fitters (Fire Protection)	Journey Level	$27.74		1	
Kitsap	Residential Stone Masons	Journey Level	$52.82	5A	1M	
Kitsap	Residential Terrazzo Workers	Journey Level	$9.47		1	
Kitsap	Residential Terrazzo/Tile Finishers	Journey Level	$30.26		1	
Kitsap	Residential Tile Setters	Journey Level	$31.14		1	
Kitsap	Roofers	Journey Level	$46.46	5A	3H	
Kitsap	Roofers	Using Irritable Bituminous Materials	$48.71	5A	3H	
Kitsap	Sheet Metal Workers	Journey Level (Field or Shop)	$72.83	7F	1E	
Kitsap	Shipbuilding & Ship Repair	CARPENTER	$19.29		1	
Kitsap	Shipbuilding & Ship Repair	ELECTRICIAN	$25.53		1	
Kitsap	Shipbuilding & Ship Repair	Heat & Frost Insulator	$63.18	5J	1S	
Kitsap	Shipbuilding & Ship Repair	Laborer	$19.64		1	
Kitsap	Shipbuilding & Ship Repair	MACHINIST	$19.29		1	
Kitsap	Shipbuilding & Ship Repair	OPERATOR	$19.44		1	
Kitsap	Shipbuilding & Ship Repair	Painter	$39.35	6Z	2B	
Kitsap	Shipbuilding & Ship Repair	PIPEFITTER	$19.29		1	
Kitsap	Shipbuilding & Ship Repair	RIGGER	$19.29		1	
Kitsap	Shipbuilding & Ship Repair	Sheet Metal	$22.21		1	
Kitsap	Shipbuilding & Ship Repair	SHIPFITTER	$19.29		1	

Kitsap	Shipbuilding & Ship Repair	WELDER/BURNER	$19.29		1	
Kitsap	Sign Makers & Installers (Electrical)	Journey Level	$20.58		1	
Kitsap	Sign Makers & Installers (Non-Electrical)	Journey Level	$9.47		1	
Kitsap	Soft Floor Layers	Journey Level	$44.11	5A	3D	
Kitsap	Solar Controls For Windows	Journey Level	$10.31		1	
Kitsap	Sprinkler Fitters (Fire Protection)	Journey Level	$70.14	5C	1X	
Kitsap	Stage Rigging Mechanics (Non Structural)	Journey Level	$13.23		1	
Kitsap	Stone Masons	Journey Level	$52.82	5A	1M	
Kitsap	Street And Parking Lot Sweeper Workers	Journey Level	$16.00		1	
Kitsap	Surveyors	Assistant Construction Site Surveyor	$56.00	7A	3C	8P
Kitsap	Surveyors	Chainman	$55.47	7A	3C	8P
Kitsap	Surveyors	Construction Site Surveyor	$56.94	7A	3C	8P
Kitsap	Telecommunication Technicians	Journey Level	$43.32	7E	1E	
Kitsap	Telephone Line Construction - Outside	Cable Splicer	$37.60	5A	2B	
Kitsap	Telephone Line Construction - Outside	Hole Digger/Ground Person	$20.79	5A	2B	
Kitsap	Telephone Line Construction - Outside	Installer (Repairer)	$36.02	5A	2B	
Kitsap	Telephone Line Construction - Outside	Special Aparatus Installer I	$37.60	5A	2B	
Kitsap	Telephone Line Construction - Outside	Special Apparatus Installer II	$36.82	5A	2B	
Kitsap	Telephone Line Construction - Outside	Telephone Equipment Operator (Heavy)	$37.60	5A	2B	
Kitsap	Telephone Line Construction - Outside	Telephone Equipment Operator (Light)	$34.94	5A	2B	
Kitsap	Telephone Line Construction - Outside	Telephone Lineperson	$34.93	5A	2B	
Kitsap	Telephone Line Construction - Outside	Television Groundperson	$19.73	5A	2B	
Kitsap	Telephone Line Construction - Outside	Television Lineperson/Installer	$26.31	5A	2B	
Kitsap	Telephone Line Construction - Outside	Television System Technician	$31.50	5A	2B	
Kitsap	Telephone Line Construction - Outside	Television Technician	$28.23	5A	2B	
Kitsap	Telephone Line Construction - Outside	Tree Trimmer	$34.93	5A	2B	
Kitsap	Terrazzo Workers	Journey Level	$47.46	5A	1M	
Kitsap	Tile Setters	Journey Level	$47.46	5A	1M	
Kitsap	Tile, Marble & Terrazzo Finishers	Journey Level	$12.00		1	

Kitsap	Traffic Control Stripers	Journey Level	$43.73	7A	1K	
Kitsap	Truck Drivers	Asphalt Mix Over 16 Yards (W. WA-Joint Council 28)	$51.25	5D	3A	8L
Kitsap	Truck Drivers	Asphalt Mix To 16 Yards (W. WA-Joint Council 28)	$50.41	5D	3A	8L
Kitsap	Truck Drivers	Dump Truck	$19.60		1	
Kitsap	Truck Drivers	Dump Truck And Trailer	$19.60		1	
Kitsap	Truck Drivers	Other Trucks	$18.37		1	
Kitsap	Truck Drivers	Transit Mixer	$20.79		1	
Kitsap	Well Drillers & Irrigation Pump Installers	Irrigation Pump Installer	$13.17		1	
Kitsap	Well Drillers & Irrigation Pump Installers	Oiler	$14.08		1	
Kitsap	Well Drillers & Irrigation Pump Installers	Well Driller	$14.40		1	

THIS PAGE INTENTIONALLY LEFT BLANK

Washington State Department of Labor and Industries
Policy Statement
(Regarding the Production of "Standard" or "Non-standard" Items)

Below is the department's (State L&I's) list of criteria to be used in determining whether a prefabricated item is "standard" or "non-standard". For items not appearing on WSDOT's predetermined list, these criteria shall be used by the Contractor (and the Contractor's subcontractors, agents to subcontractors, suppliers, manufacturers, and fabricators) to determine coverage under RCW 39.12. The production, in the State of Washington, of non-standard items is covered by RCW 39.12, and the production of standard items is not. The production of any item outside the State of Washington is not covered by RCW 39.12.

1. Is the item fabricated for a public works project? If not, it is not subject to RCW 39.12. If it is, go to question 2.

2. Is the item fabricated on the public works jobsite? If it is, the work is covered under RCW 39.12. If not, go to question 3.

3. Is the item fabricated in an assembly/fabrication plant set up for, and dedicated primarily to, the public works project? If it is, the work is covered by RCW 39.12. If not, go to question 4.

4. Does the item require any assembly, cutting, modification or other fabrication by the supplier? If not, the work is not covered by RCW 39.12. If yes, go to question 5.

5. Is the prefabricated item intended for the public works project typically an inventory item which could reasonably be sold on the general market? If not, the work is covered by RCW 39.12. If yes, go to question 6.

6. Does the specific prefabricated item, generally defined as standard, have any unusual characteristics such as shape, type of material, strength requirements, finish, etc? If yes, the work is covered under RCW 39.12.

Any firm with questions regarding the policy, WSDOT's Predetermined List, or for determinations of covered and non-covered workers shall be directed to State L&I at (360) 902-5330.

WSDOT's
Predetermined List for
Suppliers - Manufactures - Fabricator

Below is a list of potentially prefabricated items, originally furnished by WSDOT to Washington State Department of Labor and Industries, that may be considered non-standard and therefore covered by the prevailing wage law, RCW 39.12. Items marked with an X in the "YES" column should be considered to be non-standard and therefore covered by RCW 39.12. Items marked with an X in the "NO" column should be considered to be standard and therefore not covered. Of course, exceptions to this general list may occur, and in that case shall be evaluated according to the criteria described in State and L&I's policy statement.

	ITEM DESCRIPTION	YES	NO
1.	Metal rectangular frames, solid metal covers, herringbone grates, and bi-directional vaned grates for Catch Basin Types 1, 1L, 1P, and 2 and Concrete Inlets. See Std. Plans		X
2.	Metal circular frames (rings) and covers, circular grates, and prefabricated ladders for Manhole Types 1, 2, and 3, Drywell Types 1, 2, and 3 and Catch Basin Type 2. See Std. Plans		X
3.	Prefabricated steel grate supports and welded grates, metal frames and dual vaned grates, and Type 1, 2, and 3 structural tubing grates for Drop Inlets. See Std. Plans.		X
4.	Concrete Pipe - Plain Concrete pipe and reinforced concrete pipe Class 2 to 5 sizes smaller than 60 inch diameter.		X
5.	Concrete Pipe - Plain Concrete pipe and reinforced concrete pipe Class 2 to 5 sizes larger than 60 inch diameter.		X
6.	Corrugated Steel Pipe - Steel lock seam corrugated pipe for culverts and storm sewers, sizes 30 inch to 120 inches in diameter. May also be treated, 1 thru 5.		X
7.	Corrugated Aluminum Pipe - Aluminum lock seam corrugated pipe for culverts and storm sewers, sizes 30 inch to 120 inches in diameter. May also be treated, #5.		X

	ITEM DESCRIPTION	YES	NO
8.	Anchor Bolts & Nuts - Anchor Bolts and Nuts, for mounting sign structures, luminaries and other items, shall be made from commercial bolt stock. See Contract Plans and Std. Plans for size and material type.		X
9.	Aluminum Pedestrian Handrail - Pedestrian handrail conforming to the type and material specifications set forth in the contract plans. Welding of aluminum shall be in accordance with Section 9-28.14(3).	X	
10.	Major Structural Steel Fabrication - Fabrication of major steel items such as trusses, beams, girders, etc., for bridges.	X	
11.	Minor Structural Steel Fabrication - Fabrication of minor steel Items such as special hangers, brackets, access doors for structures, access ladders for irrigation boxes, bridge expansion joint systems, etc., involving welding, cutting, punching and/or boring of holes. See Contact Plans for item description and shop drawings.	X	
12.	Aluminum Bridge Railing Type BP - Metal bridge railing conforming to the type and material specifications set forth in the Contract Plans. Welding of aluminum shall be in accordance with Section 9-28.14(3).		X
13.	Concrete Piling--Precast-Prestressed concrete piling for use as 55 and 70 ton concrete piling. Concrete to conform to Section 9-19.1 of Std. Spec..	X	
14.	Precast Manhole Types 1, 2, and 3 with cones, adjustment sections and flat top slabs. See Std. Plans.		X
15.	Precast Drywell Types 1, 2, and with cones and adjustment Sections. See Std. Plans.		X
16.	Precast Catch Basin - Catch Basin type 1, 1L, 1P, and 2 With adjustment sections. See Std. Plans.		X

	ITEM DESCRIPTION	YES	NO
17.	Precast Concrete Inlet - with adjustment sections, See Std. Plans		X
18.	Precast Drop Inlet Type 1 and 2 with metal grate supports. See Std. Plans.		X
19.	Precast Grate Inlet Type 2 with extension and top units. See Std. Plans		X
20.	Metal frames, vaned grates, and hoods for Combination Inlets. See Std. Plans		X
21.	Precast Concrete Utility Vaults - Precast Concrete utility vaults of various sizes. Used for in ground storage of utility facilities and controls. See Contract Plans for size and construction requirements. Shop drawings are to be provided for approval prior to casting		X
22.	Vault Risers - For use with Valve Vaults and Utilities Vaults.		X
23.	Valve Vault - For use with underground utilities. See Contract Plans for details.		X
24.	Precast Concrete Barrier - Precast Concrete Barrier for use as new barrier or may also be used as Temporary Concrete Barrier. Only new state approved barrier may be used as permanent barrier.		X
25.	Reinforced Earth Wall Panels – Reinforced Earth Wall Panels in size and shape as shown in the Plans. Fabrication plant has annual approval for methods and materials to be used. See Shop Drawing. Fabrication at other locations may be approved, after facilities inspection, contact HQ. Lab.	X	
26.	Precast Concrete Walls - Precast Concrete Walls - tilt-up wall panel in size and shape as shown in Plans. Fabrication plant has annual approval for methods and materials to be used	X	

	ITEM DESCRIPTION	YES	NO
27.	Precast Railroad Crossings - Concrete Crossing Structure Slabs.	X	
28.	12, 18 and 26 inch Standard Precast Prestressed Girder – Standard Precast Prestressed Girder for use in structures. Fabricator plant has annual approval of methods and materials to be used. Shop Drawing to be provided for approval prior to casting girders. See Std. Spec. Section 6-02.3(25)A	X	
29.	Prestressed Concrete Girder Series 4-14 - Prestressed Concrete Girders for use in structures. Fabricator plant has annual approval of methods and materials to be used. Shop Drawing to be provided for approval prior to casting girders. See Std. Spec. Section 6-02.3(25)A .	X	
30.	Prestressed Tri-Beam Girder - Prestressed Tri-Beam Girders for use in structures. Fabricator plant has annual approval of methods and materials to be used. Shop Drawing to be provided for approval prior to casting girders. See Std. Spec. Section 6-02.3(25)A	X	
31.	Prestressed Precast Hollow-Core Slab – Precast Prestressed Hollow-core slab for use in structures. Fabricator plant has annual approval of methods and materials to be used. Shop Drawing to be provided for approval prior to casting girders. See Std. Spec. Section 6-02.3(25)A.	X	
32.	Prestressed-Bulb Tee Girder - Bulb Tee Prestressed Girder for use in structures. Fabricator plant has annual approval of methods and materials to be used. Shop Drawing to be provided for approval prior to casting girders. See Std. Spec. Section 6-02.3(25)A	X	
33.	Monument Case and Cover See Std. Plan.		X

	ITEM DESCRIPTION	YES	NO
34.	Cantilever Sign Structure - Cantilever Sign Structure fabricated from steel tubing meeting AASHTO-M-183. See Std. Plans, and Contract Plans for details. The steel structure shall be galvanized after fabrication in accordance with AASHTO-M-111.	X	
35.	Mono-tube Sign Structures - Mono-tube Sign Bridge fabricated to details shown in the Plans. Shop drawings for approval are required prior to fabrication.	X	
36.	Steel Sign Bridges - Steel Sign Bridges fabricated from steel tubing meeting AASHTO-M-138 for Aluminum Alloys. See Std. Plans, and Contract Plans for details. The steel structure shall be galvanized after fabrication in accordance with AASHTO-M-111.	X	
37.	Steel Sign Post - Fabricated Steel Sign Posts as detailed in Std Plans. Shop drawings for approval are to be provided prior to fabrication		X
38.	Light Standard-Prestressed - Spun, prestressed, hollow concrete poles.	X	
39.	Light Standards - Lighting Standards for use on highway illumination systems, poles to be fabricated to conform with methods and materials as specified on Std. Plans. See Specia Provisions for pre-approved drawings.	X	
40.	Traffic Signal Standards - Traffic Signal Standards for use on highway and/or street signal systems. Standards to be fabricated to conform with methods and material as specified on Std. Plans. See Special Provisions for pre-approved drawings	X	
41.	Precast Concrete Sloped Mountable Curb (Single and DualFaced) See Std. Plans.		X

	ITEM DESCRIPTION	YES	NO
42.	Traffic Signs - Prior to approval of a Fabricator of Traffic Signs, the sources of the following materials must be submitted and approved for reflective sheeting, legend material, and aluminum sheeting. **NOTE:** *** Fabrication inspection required. Only signs tagged "Fabrication Approved" by WSDOT Sign Fabrication Inspector to be installed	X	X
		Custom Message	Std Signing Message
43.	Cutting & bending reinforcing steel		X
44.	Guardrail components	X	X
		Custom End Sec	Standard Sec
45.	Aggregates/Concrete mixes	Covered by WAC 296-127-018	
46.	Asphalt	Covered by WAC 296-127-018	
47.	Fiber fabrics		X
48.	Electrical wiring/components		X
49.	treated or untreated timber pile		X
50.	Girder pads (elastomeric bearing)	X	
51.	Standard Dimension lumber		X
52.	Irrigation components		X

ITEM DESCRIPTION	YES	NO
53. Fencing materials		X
54. Guide Posts		X
55. Traffic Buttons		X
56. Epoxy		X
57. Cribbing		X
58. Water distribution materials		X
59. Steel "H" piles		X
60. Steel pipe for concrete pile casings		X
61. Steel pile tips, standard		X
62. Steel pile tips, custom	X	

Prefabricated items specifically produced for public works projects that are prefabricated in a county other than the county wherein the public works project is to be completed, the wage for the offsite prefabrication shall be the applicable prevailing wage for the county in which the actual prefabrication takes place.

It is the manufacturer of the prefabricated product to verify that the correct county wage rates are applied to work they perform.

See RCW 39.12.010
(The definition of "locality" in RCW 39.12.010(2) contains the phrase "wherein the physical work is being performed." The department interprets this phrase to mean the actual work site.

WSDOT's List of State Occupations not applicable to Heavy and Highway Construction Projects

This project is subject to the state hourly minimum rates for wages and fringe benefits in the contract provisions, as provided by the state Department of Labor and Industries.
The following list of occupations, is comprised of those occupations that are not normally used in the construction of heavy and highway projects.
When considering job classifications for use and / or payment when bidding on, or building heavy and highway construction projects for, or administered by WSDOT, these Occupations will be excepted from the included "Washington State Prevailing Wage Rates For Public Work Contracts" documents.

- Building Service Employees
- Electrical Fixture Maintenance Workers
- Electricians - Motor Shop
- Heating Equipment Mechanics
- Industrial Engine and Machine Mechanics
- Industrial Power Vacuum Cleaners
- Inspection, Cleaning, Sealing of Water Systems by Remote Control
- Laborers - Underground Sewer & Water
- Machinists (Hydroelectric Site Work)
- Modular Buildings
- Playground & Park Equipment Installers
- Power Equipment Operators - Underground Sewer & Water
- Residential *** ALL ASSOCIATED RATES ***
- Sign Makers and Installers (Non-Electrical)
- Sign Makers and Installers (Electrical)
- Stage Rigging Mechanics (Non Structural)

The following occupations may be used only as outlined in the preceding text concerning "WSDOT's list for Suppliers - Manufacturers - Fabricators"

- Fabricated Precast Concrete Products
- Metal Fabrication (In Shop)

Definitions for the Scope of Work for prevailing wages may be found at the Washington State Department of Labor and Industries web site and in WAC Chapter 296-127.

WAC 296-127-018 Agency filings affecting this section

Coverage and exemptions of workers involved in the production and delivery of gravel, concrete, asphalt, or similar materials.

(1) The materials covered under this section include but are not limited to: Sand, gravel, crushed rock, concrete, asphalt, or other similar materials.

(2) All workers, regardless of by whom employed, are subject to the provisions of chapter 39.12 RCW when they perform any or all of the following functions:

(a) They deliver or discharge any of the above-listed materials to a public works project site:

(i) At one or more point(s) directly upon the location where the material will be incorporated into the project; or

(ii) At multiple points at the project; or

(iii) Adjacent to the location and coordinated with the incorporation of those materials.

(b) They wait at or near a public works project site to perform any tasks subject to this section of the rule.

(c) They remove any materials from a public works construction site pursuant to contract requirements or specifications (e.g., excavated materials, materials from demolished structures, clean-up materials, etc.).

(d) They work in a materials production facility (e.g., batch plant, borrow pit, rock quarry, etc.,) which is established for a public works project for the specific, but not necessarily exclusive, purpose of supplying materials for the project.

(e) They deliver concrete to a public works site regardless of the method of incorporation.

(f) They assist or participate in the incorporation of any materials into the public works project.

(3) All travel time that relates to the work covered under subsection (2) of this section requires the payment of prevailing wages. Travel time includes time spent waiting to load, loading, transporting, waiting to unload, and delivering materials. Travel time would include all time spent in travel in support of a public works project whether the vehicle is empty or full. For example, travel time spent returning to a supply source to obtain another load of material for use on a public works site or returning to the public works site to obtain another load of excavated material is time spent in travel that is subject to prevailing wage. Travel to a supply source, including travel from a public works site, to obtain materials for use on a private project would not be travel subject to the prevailing wage.

(4) Workers are not subject to the provisions of chapter 39.12 RCW when they deliver materials to a stockpile.

(a) A "stockpile" is defined as materials delivered to a pile located away from the site of incorporation such that the stockpiled materials must be physically moved from the stockpile and transported to another location on the project site in order to be incorporated into the project.

(b) A stockpile does not include any of the functions described in subsection (2)(a) through (f) of this section; nor does a stockpile include materials delivered or distributed to multiple locations upon the project site; nor does a stockpile include materials dumped at the place of incorporation, or adjacent to the location and coordinated with the incorporation.

(5) The applicable prevailing wage rate shall be determined by the locality in which the work is performed. Workers subject to subsection (2)(d) of this section, who produce such materials at an off-site facility shall be paid the applicable prevailing wage rates for the county in which the off-site facility is located. Workers subject to subsection (2) of this section, who deliver such materials to a public works project site shall be paid the applicable prevailing wage rates for the county in which the public works project is located.

[Statutory Authority: Chapter 39.12 RCW, RCW 43.22.051 and 43.22.270. 08-24-101, § 296-127-018, filed 12/2/08, effective 1/2/09. Statutory Authority: Chapters 39.04 and 39.12 RCW and RCW 43.22.270. 92-01-104 and 92-08-101, § 296-127-018, filed 12/18/91 and 4/1/92, effective 8/31/92.]

THIS PAGE INTENTIONALLY LEFT BLANK

****

Overtime Codes

Overtime calculations are based on the hourly rate actually paid to the worker. On public works projects, the hourly rate must be not less than the prevailing rate of wage minus the hourly rate of the cost of fringe benefits actually provided for the worker.

1. ALL HOURS WORKED IN EXCESS OF EIGHT (8) HOURS PER DAY OR FORTY (40) HOURS PER WEEK SHALL BE PAID AT ONE AND ONE-HALF TIMES THE HOURLY RATE OF WAGE.

B. All hours worked on Saturdays shall be paid at one and one-half times the hourly rate of wage. All hours worked on Sundays and holidays shall be paid at double the hourly rate of wage.

C. The first two (2) hours after eight (8) regular hours Monday through Friday and the first ten (10) hours on Saturday shall be paid at one and one-half times the hourly rate of wage. All other overtime hours and all hours worked on Sundays and holidays shall be paid at double the hourly rate of wage.

D. The first two (2) hours before or after a five-eight (8) hour workweek day or a four-ten (10) hour workweek day and the first eight (8) hours worked the next day after either workweek shall be paid at one and one-half times the hourly rate of wage. All additional hours worked and all worked on Sundays and holidays shall be paid at double the hourly rate of wage.

E. The first two (2) hours after eight (8) regular hours Monday through Friday and the first eight (8) hours on Saturday shall be paid at one and one-half times the hourly rate of wage. All other hours worked Monday through Saturday, and all hours worked on Sundays and holidays shall be paid at double the hourly rate of wage.

F. The first two (2) hours after eight (8) regular hours Monday through Friday and the first ten (10) hours on Saturday shall be paid at one and one-half times the hourly rate of wage. All other overtime hours worked, except Labor Day, shall be paid at double the hourly rate of wage. All hours worked on Labor Day shall be paid at three times the hourly rate of wage.

G. The first ten (10) hours worked on Saturdays and the first ten (10) hours worked on a fifth calendar weekday in a four-ten hour schedule, shall be paid at one and one-half times the hourly rate of wage. All hours worked in excess of ten (10) hours per day Monday through Saturday and all hours worked on Sundays and holidays shall be paid at double the hourly rate of wage.

H. All hours worked on Saturdays (except makeup days if work is lost due to inclement weather conditions or equipment breakdown) shall be paid at one and one-half times the hourly rate of wage. All hours worked Monday through Saturday over twelve (12) hours and all hours worked on Sundays and holidays shall be paid at double the hourly rate of wage.

I. All hours worked on Sundays and holidays shall also be paid at double the hourly rate of wage.

J. The first two (2) hours after eight (8) regular hours Monday through Friday and the first ten (10) hours on Saturday shall be paid at one and one-half times the hourly rate of wage. All hours worked over ten (10) hours Monday through Saturday, Sundays and holidays shall be paid at double the hourly rate of wage.

K. All hours worked on Saturdays and Sundays shall be paid at one and one-half times the hourly rate of wage. All hours worked on holidays shall be paid at double the hourly rate of wage.

M. All hours worked on Saturdays (except makeup days if work is lost due to inclement weather conditions) shall be paid at one and one-half times the hourly rate of wage. All hours worked on Sundays and holidays shall be paid at double the hourly rate of wage.

N. All hours worked on Saturdays (except makeup days) shall be paid at one and one-half times the hourly rate of wage. All hours worked on Sundays and holidays shall be paid at double the hourly rate of wage.

Overtime Codes Continued

1. O. The first ten (10) hours worked on Saturday shall be paid at one and one-half times the hourly rate of wage. All hours worked on Sundays, holidays and after twelve (12) hours, Monday through Friday and after ten (10) hours on Saturday shall be paid at double the hourly rate of wage.

P. All hours worked on Saturdays (except makeup days if circumstances warrant) and Sundays shall be paid at one and one-half times the hourly rate of wage. All hours worked on holidays shall be paid at double the hourly rate of wage.

Q. The first two (2) hours after eight (8) regular hours Monday through Friday and up to ten (10) hours worked on Saturdays shall be paid at one and one-half times the hourly rate of wage. All hours worked in excess of ten (10) hours per day Monday through Saturday and all hours worked on Sundays and holidays (except Christmas day) shall be paid at double the hourly rate of wage. All hours worked on Christmas day shall be paid at two and one-half times the hourly rate of wage.

R. All hours worked on Sundays and holidays shall be paid at two times the hourly rate of wage.

S. The first two (2) hours after eight (8) regular hours Monday through Friday and the first eight (8) hours on Saturday shall be paid at one and one-half times the hourly rate of wage. All hours worked on holidays and all other overtime hours worked, except Labor Day, shall be paid at double the hourly rate of wage. All hours worked on Labor Day shall be paid at three times the hourly rate of wage.

U. All hours worked on Saturdays shall be paid at one and one-half times the hourly rate of wage. All hours worked on Sundays and holidays (except Labor Day) shall be paid at two times the hourly rate of wage. All hours worked on Labor Day shall be paid at three times the hourly rate of wage.

V. All hours worked on Sundays and holidays (except Thanksgiving Day and Christmas day) shall be paid at one and one-half times the hourly rate of wage. All hours worked on Thanksgiving Day and Christmas day shall be paid at double the hourly rate of wage.

W. All hours worked on Saturdays and Sundays (except make-up days due to conditions beyond the control of the employer)) shall be paid at one and one-half times the hourly rate of wage. All hours worked on holidays shall be paid at double the hourly rate of wage.

X. The first four (4) hours after eight (8) regular hours Monday through Friday and the first twelve (12) hours on Saturday shall be paid at one and one-half times the hourly rate of wage. All hours worked over twelve (12) hours Monday through Saturday, Sundays and holidays shall be paid at double the hourly rate of wage. When holiday falls on Saturday or Sunday, the day before Saturday, Friday, and the day after Sunday, Monday, shall be considered the holiday and all work performed shall be paid at double the hourly rate of wage.

Y. All hours worked outside the hours of 5:00 am and 5:00 pm (or such other hours as may be agreed upon by any employer and the employee) and all hours worked in excess of eight (8) hours per day (10 hours per day for a 4 x 10 workweek) and on Saturdays and holidays (except labor day) shall be paid at one and one-half times the hourly rate of wage. (except for employees who are absent from work without prior approval on a scheduled workday during the workweek shall be paid at the straight-time rate until they have worked 8 hours in a day (10 in a 4 x 10 workweek) or 40 hours during that workweek.) All hours worked Monday through Saturday over twelve (12) hours and all hours worked on Sundays and Labor Day shall be paid at double the hourly rate of wage.

Z. All hours worked on Saturdays and Sundays shall be paid at one and one-half times the hourly rate of wage. All hours worked on holidays shall be paid the straight time rate of pay in addition to holiday pay.

Overtime Codes Continued

2. ALL HOURS WORKED IN EXCESS OF EIGHT (8) HOURS PER DAY OR FORTY (40) HOURS PER WEEK SHALL BE PAID AT ONE AND ONE-HALF TIMES THE HOURLY RATE OF WAGE.

   B. All hours worked on holidays shall be paid at one and one-half times the hourly rate of wage.

   C. All hours worked on Sundays shall be paid at one and one-half times the hourly rate of wage. All hours worked on holidays shall be paid at two times the hourly rate of wage.

   F. The first eight (8) hours worked on holidays shall be paid at the straight hourly rate of wage in addition to the holiday pay. All hours worked in excess of eight (8) hours on holidays shall be paid at double the hourly rate of wage.

   G. All hours worked on Sunday shall be paid at two times the hourly rate of wage. All hours worked on paid holidays shall be paid at two and one-half times the hourly rate of wage including holiday pay.

   H. All hours worked on Sunday shall be paid at two times the hourly rate of wage. All hours worked on holidays shall be paid at one and one-half times the hourly rate of wage.

   O. All hours worked on Sundays and holidays shall be paid at one and one-half times the hourly rate of wage.

   R. All hours worked on Sundays and holidays and all hours worked over sixty (60) in one week shall be paid at double the hourly rate of wage.

   U. All hours worked on Saturdays shall be paid at one and one-half times the hourly rate of wage. All hours worked over 12 hours in a day or on Sundays and holidays shall be paid at double the hourly rate of wage.

   W. The first two (2) hours after eight (8) regular hours Monday through Friday and the first eight (8) hours on Saturday shall be paid at one and one-half times the hourly rate of wage. All other hours worked Monday through Saturday, and all hours worked on Sundays and holidays shall be paid at double the hourly rate of wage. On a four-day, ten-hour weekly schedule, either Monday thru Thursday or Tuesday thru Friday schedule, all hours worked after ten shall be paid at double the hourly rate of wage. The first eight (8) hours worked on the fifth day shall be paid at one and one-half times the hourly rate of wage. All other hours worked on the fifth, sixth, and seventh days and on holidays shall be paid at double the hourly rate of wage.

3. ALL HOURS WORKED IN EXCESS OF EIGHT (8) HOURS PER DAY OR FORTY (40) HOURS PER WEEK SHALL BE PAID AT ONE AND ONE-HALF TIMES THE HOURLY RATE OF WAGE.

   A. Work performed in excess of eight (8) hours of straight time per day, or ten (10) hours of straight time per day when four ten (10) hour shifts are established, or forty (40) hours of straight time per week, Monday through Friday, or outside the normal shift, and all work on Saturdays shall be paid at time and one-half the straight time rate. Hours worked over twelve hours (12) in a single shift and all work performed after 6:00 pm Saturday to 6:00 am Monday and holidays shall be paid at double the straight time rate of pay. Any shift starting between the hours of 6:00 pm and midnight shall receive an additional one dollar ($1.00) per hour for all hours worked that shift. The employer shall have the sole discretion to assign overtime work to employees. Primary consideration for overtime work shall be given to employees regularly assigned to the work to be performed on overtime situations. After an employee has worked eight (8) hours at an applicable overtime rate, all additional hours shall be at the applicable overtime rate until such time as the employee has had a break of eight (8) hours or more.

   C. Work performed in excess of eight (8) hours of straight time per day, or ten (10) hours of straight time per day when four ten (10) hour shifts are established, or forty (40) hours of straight time per week, Monday through Friday, or outside the normal shift, and all work on Saturdays shall be paid at one and one-half times the hourly rate of wage. All work performed after 6:00 pm Saturday to 5:00 am Monday and Holidays shall be paid at double the hourly rate of wage. After an employee has worked eight (8) hours at an applicable overtime rate, all additional hours shall be at the applicable overtime rate until such time as the employee has had a break of eight (8) hours or more.

Overtime Codes Continued

3. D. All hours worked between the hours of 6:00 pm and 6:00 am, Monday through Saturday, shall be paid at a premium rate of 15% over the hourly rate of wage. All other hours worked after 6:00 am on Saturdays, shall be paid at one and one-half times the hourly rate of wage. All hours worked on Sundays and holidays shall be paid at double the hourly rate of wage.

E. All hours worked Sundays and holidays shall be paid at double the hourly rate of wage. Each week, once 40 hours of straight time work is achieved, then any hours worked over 10 hours per day Monday through Saturday shall be paid at double the hourly wage rate.

F. All hours worked on Saturday shall be paid at one and one-half times the hourly rate of wage. All hours worked on Sunday shall be paid at two times the hourly rate of wage. All hours worked on paid holidays shall be paid at two and one-half times the hourly rate of wage including holiday pay.

H. All work performed on Sundays between March 16th and October 14th and all Holidays shall be compensated for at two (2) times the regular rate of pay. Work performed on Sundays between October 15th and March 15th shall be compensated at one and one half (1-1/2) times the regular rate of pay.

I. All hours worked on Saturdays shall be paid at one and one-half times the hourly rate of wage. In the event the job is down due to weather conditions during a five day work week (Monday through Friday,) or a four day-ten hour work week (Tuesday through Friday,) then Saturday may be worked as a voluntary make-up day at the straight time rate. However, Saturday shall not be utilized as a make-up day when a holiday falls on Friday. All hours worked Monday through Saturday over twelve (12) hours and all hours worked on Sundays and holidays shall be paid at double the hourly rate of wage.

4. ALL HOURS WORKED IN EXCESS OF EIGHT (8) HOURS PER DAY OR FORTY (40) HOURS PER WEEK SHALL BE PAID AT ONE AND ONE-HALF TIMES THE HOURLY RATE OF WAGE.

A. All hours worked in excess of eight (8) hours per day or forty (40) hours per week shall be paid at double the hourly rate of wage. All hours worked on Saturdays, Sundays and holidays shall be paid at double the hourly rate of wage.

B. All hours worked over twelve (12) hours per day and all hours worked on holidays shall be paid at double the hourly rate of wage.

C. On Monday through Friday, the first four (4) hours of overtime after eight (8) hours of straight time work shall be paid at one and one half (1-1/2) times the straight time rate of pay, unless a four (4) day ten (10) hour workweek has been established. On a four (4) day ten (10) hour workweek scheduled Monday through Thursday, or Tuesday through Friday, the first two (2) hours of overtime after ten (10) hours of straight time work shall be paid at one and one half (1-1/2) times the straight time rate of pay. On Saturday, the first twelve (12) hours of work shall be paid at one and one half (1-1/2) times the straight time rate of pay, except that if the job is down on Monday through Friday due to weather conditions or other conditions outside the control of the employer, the first ten (10) hours on Saturday may be worked at the straight time rate of pay. All hours worked over twelve (12) hours in a day and all hours worked on Sunday and Holidays shall be paid at two (2) times the straight time rate of pay.

Overtime Codes Continued

4. D. All hours worked in excess of eight (8) hours per day or forty (40) hours per week shall be paid at double the hourly rate of wage. All hours worked on Saturday, Sundays and holidays shall be paid at double the hourly rate of pay. Rates include all members of the assigned crew.

EXCEPTION:
On all multipole structures and steel transmission lines, switching stations, regulating, capacitor stations, generating plants, industrial plants, associated installations and substations, except those substations whose primary function is to feed a distribution system, will be paid overtime under the following rates:

The first two (2) hours after eight (8) regular hours Monday through Friday of overtime on a regular workday, shall be paid at one and one-half times the hourly rate of wage. All hours in excess of ten (10) hours will be at two (2) times the hourly rate of wage. The first eight (8) hours worked on Saturday will be paid at one and one-half (1-1/2) times the hourly rate of wage. All hours worked in excess of eight (8) hours on Saturday, and all hours worked on Sundays and holidays will be at the double the hourly rate of wage.

All overtime eligible hours performed on the above described work that is energized, shall be paid at the double the hourly rate of wage.

E. The first two (2) hours after eight (8) regular hours Monday through Friday and the first eight (8) hours on Saturday shall be paid at one and one-half times the hourly rate of wage. All other hours worked Monday through Saturday, and all hours worked on Sundays and holidays shall be paid at double the hourly rate of wage.

On a four-day, ten-hour weekly schedule, either Monday thru Thursday or Tuesday thru Friday schedule, all hours worked after ten shall be paid at double the hourly rate of wage. The Monday or Friday not utilized in the normal four-day, ten hour work week, and Saturday shall be paid at one and one half (1½) times the regular shift rate for the first eight (8) hours. All other hours worked Monday through Saturday, and all hours worked on Sundays and holidays shall be paid at double the hourly rate of wage.

F. All hours worked between the hours of 6:00 pm and 6:00 am, Monday through Saturday, shall be paid at a premium rate of 20% over the hourly rate of wage. All hours worked on Sundays shall be paid at one and one-half times the hourly rate of wage. All hours worked on holidays shall be paid at double the hourly rate of wage.

G. All hours worked on Saturdays shall be paid at one and one-half times the hourly rate of wage. All hours worked Monday through Saturday over twelve (12) hours and all hours worked on Sundays and holidays shall be paid at double the hourly rate of wage.

Holiday Codes

5. A. Holidays: New Year's Day, Memorial Day, Independence Day, Labor Day, Thanksgiving Day, Friday after Thanksgiving Day, and Christmas Day (7).

B. Holidays: New Year's Day, Memorial Day, Independence Day, Labor Day, Thanksgiving Day, Friday after Thanksgiving Day, the day before Christmas, and Christmas Day (8).

C. Holidays: New Year's Day, Presidents' Day, Memorial Day, Independence Day, Labor Day, Thanksgiving Day, the Friday after Thanksgiving Day, And Christmas Day (8).

D. Holidays: New Year's Day, Memorial Day, Independence Day, Labor Day, Thanksgiving Day, the Friday and Saturday after Thanksgiving Day, And Christmas Day (8).

H. Holidays: New Year's Day, Memorial Day, Independence Day, Thanksgiving Day, the Day after Thanksgiving Day, And Christmas (6).

Holiday Codes Continued

5. I. Holidays: New Year's Day, Memorial Day, Independence Day, Labor Day, Thanksgiving Day, and Christmas Day (6).

J. Holidays: New Year's Day, Memorial Day, Independence Day, Thanksgiving Day, Friday after Thanksgiving Day, Christmas Eve Day, And Christmas Day (7).

K. Holidays: New Year's Day, Presidents' Day, Memorial Day, Independence Day, Labor Day, Thanksgiving Day, Friday After Thanksgiving Day, The Day Before Christmas, And Christmas Day (9).

L. Holidays: New Year's Day, Martin Luther King Jr. Day, Memorial Day, Independence Day, Labor Day, Thanksgiving Day, Friday after Thanksgiving Day, And Christmas Day (8).

N. Holidays: New Year's Day, Presidents' Day, Memorial Day, Independence Day, Labor Day, Veterans' Day, Thanksgiving Day, The Friday After Thanksgiving Day, And Christmas Day (9).

P. Holidays: New Year's Day, Memorial Day, Independence Day, Labor Day, Thanksgiving Day, Friday And Saturday After Thanksgiving Day, The Day Before Christmas, And Christmas Day (9). If A Holiday Falls On Sunday, The Following Monday Shall Be Considered As A Holiday.

Q. Paid Holidays: New Year's Day, Memorial Day, Independence Day, Labor Day, Thanksgiving Day, and Christmas Day (6).

R. Paid Holidays: New Year's Day, Memorial Day, Independence Day, Labor Day, Thanksgiving Day, Day After Thanksgiving Day, One-Half Day Before Christmas Day, And Christmas Day. (7 1/2).

S. Paid Holidays: New Year's Day, Presidents' Day, Memorial Day, Independence Day, Labor Day, Thanksgiving Day, And Christmas Day (7).

T. Paid Holidays: New Year's Day, Washington's Birthday, Memorial Day, Independence Day, Labor Day, Thanksgiving Day, The Friday After Thanksgiving Day, Christmas Day, And The Day Before Or After Christmas (9).

Z. Holidays: New Year's Day, Memorial Day, Independence Day, Labor Day, Veterans Day, Thanksgiving Day, the Friday after Thanksgiving Day, And Christmas Day (8).

6. A. Paid Holidays: New Year's Day, Presidents' Day, Memorial Day, Independence Day, Labor Day, Thanksgiving Day, the Friday after Thanksgiving Day, And Christmas Day (8).

E. Paid Holidays: New Year's Day, Day Before Or After New Year's Day, Presidents Day, Memorial Day, Independence Day, Labor Day, Thanksgiving Day, the Friday after Thanksgiving Day, Christmas Day, and a Half-Day On Christmas Eve Day. (9 1/2).

G. Paid Holidays: New Year's Day, Martin Luther King Jr. Day, Presidents' Day, Memorial Day, Independence Day, Labor Day, Veterans' Day, Thanksgiving Day, the Friday after Thanksgiving Day, Christmas Day, and Christmas Eve Day (11).

H. Paid Holidays: New Year's Day, New Year's Eve Day, Memorial Day, Independence Day, Labor Day, Thanksgiving Day, Friday After Thanksgiving Day, Christmas Day, The Day After Christmas, And A Floating Holiday (10).

I. Paid Holidays: New Year's Day, Memorial Day, Independence Day, Labor Day, Thanksgiving Day, Friday After Thanksgiving Day, And Christmas Day (7).

Holiday Codes Continued

6. T. Paid Holidays: New Year's Day, Presidents' Day, Memorial Day, Independence Day, Labor Day, Thanksgiving Day, The Friday After Thanksgiving Day, The Last Working Day Before Christmas Day, And Christmas Day (9).

   Z. Holidays: New Year's Day, Memorial Day, Independence Day, Labor Day, Thanksgiving Day, Friday after Thanksgiving Day, And Christmas Day (7). If a holiday falls on Saturday, the preceding Friday shall be considered as the holiday. If a holiday falls on Sunday, the following Monday shall be considered as the holiday.

7. A. Holidays: New Year's Day, Memorial Day, Independence Day, Labor Day, Thanksgiving Day, the Friday and Saturday after Thanksgiving Day, And Christmas Day (8). Any Holiday Which Falls On A Sunday Shall Be Observed As A Holiday On The Following Monday. If any of the listed holidays falls on a Saturday, the preceding Friday shall be a regular work day.

   B. Holidays: New Year's Day, Memorial Day, Independence Day, Labor Day, Thanksgiving Day, the Friday and Saturday after Thanksgiving Day, And Christmas Day (8). Any holiday which falls on a Sunday shall be observed as a holiday on the following Monday. Any holiday which falls on a Saturday shall be observed as a holiday on the preceding Friday.

   C. Holidays: New Year's Day, Martin Luther King Jr. Day, Memorial Day, Independence Day, Labor Day, Thanksgiving Day, the Friday after Thanksgiving Day, And Christmas Day (8). Any holiday which falls on a Sunday shall be observed as a holiday on the following Monday. Any holiday which falls on a Saturday shall be observed as a holiday on the preceding Friday.

   D. Paid Holidays: New Year's Day, Memorial Day, Independence Day, Labor Day, Veteran's Day, Thanksgiving Day, the Friday after Thanksgiving Day, And Christmas Day (8). Unpaid Holidays: President's Day. Any paid holiday which falls on a Sunday shall be observed as a holiday on the following Monday. Any paid holiday which falls on a Saturday shall be observed as a holiday on the preceding Friday.

   E. Holidays: New Year's Day, Memorial Day, Independence Day, Labor Day, Thanksgiving Day, the Friday after Thanksgiving Day, And Christmas Day (7). Any holiday which falls on a Sunday shall be observed as a holiday on the following Monday. Any holiday which falls on a Saturday shall be observed as a holiday on the preceding Friday.

   F. Holidays: New Year's Day, Memorial Day, Independence Day, Labor Day, Thanksgiving Day, the Friday after Thanksgiving Day, the last working day before Christmas day and Christmas day (8). Any holiday which falls on a Sunday shall be observed as a holiday on the following Monday. Any holiday which falls on a Saturday shall be observed as a holiday on the preceding Friday.

   G. Holidays: New Year's Day, Memorial Day, Independence Day, Labor Day, Thanksgiving Day, and Christmas Day (6). Any holiday which falls on a Sunday shall be observed as a holiday on the following Monday.

   H. Holidays: New Year's Day, Martin Luther King Jr. Day, Independence Day, Memorial Day, Labor Day, Thanksgiving Day, the Friday after Thanksgiving Day, the Last Working Day before Christmas Day and Christmas Day (9). Any holiday which falls on a Sunday shall be observed as a holiday on the following Monday. Any holiday which falls on a Saturday shall be observed as a holiday on the preceding Friday.

   I. Holidays: New Year's Day, President's Day, Independence Day, Memorial Day, Labor Day, Thanksgiving Day, The Friday After Thanksgiving Day, The Day Before Christmas Day And Christmas Day (9). Any holiday which falls on a Sunday shall be observed as a holiday on the following Monday. Any holiday which falls on a Saturday shall be observed as a holiday on the preceding Friday.

   J. Holidays: New Year's Day, Independence Day, Memorial Day, Labor Day, Thanksgiving Day and Christmas Day (6). Any holiday which falls on a Sunday shall be observed as a holiday on the following Monday. Any holiday which falls on a Saturday shall be observed as a holiday on the preceding Friday.

Holiday Codes Continued

7. K. Holidays: New Year's Day, Memorial Day, Independence Day, Thanksgiving Day, the Friday and Saturday after Thanksgiving Day, And Christmas Day (8). Any holiday which falls on a Sunday shall be observed as a holiday on the following Monday. Any holiday which falls on a Saturday shall be observed as a holiday on the preceding Friday.

L. Holidays: New Year's Day, Memorial Day, Labor Day, Independence Day, Thanksgiving Day, the Last Work Day before Christmas Day, And Christmas Day (7). Any holiday which falls on a Sunday shall be observed as a holiday on the following Monday. Any holiday which falls on a Saturday shall be observed as a holiday on the preceding Friday.

M. Paid Holidays: New Year's Day, The Day after or before New Year's Day, President's Day, Memorial Day, Independence Day, Labor Day, Thanksgiving Day, the Friday after Thanksgiving Day, Christmas Day, And the Day after or before Christmas Day (10). Any holiday which falls on a Sunday shall be observed as a holiday on the following Monday. Any holiday which falls on a Saturday shall be observed as a holiday on the preceding Friday.

N. Holidays: New Year's Day, Memorial Day, Independence Day, Labor Day, Thanksgiving Day, the Friday after Thanksgiving Day, And Christmas Day (7). Any holiday which falls on a Sunday shall be observed as a holiday on the following Monday. When Christmas falls on a Saturday, the preceding Friday shall be observed as a holiday.

P. Holidays: New Year's Day, Memorial Day, Independence Day, Labor Day, Thanksgiving Day, Friday after Thanksgiving Day, And Christmas Day (7). Any holiday which falls on a Sunday shall be observed as a holiday on the following Monday.

Q. Holidays: New Year's Day, Memorial Day, Independence Day, Labor Day, Thanksgiving Day, the Friday after Thanksgiving Day, the Last Working Day before Christmas Day and Christmas Day (8). Any holiday which falls on a Sunday shall be observed as a holiday on the following Monday. If any of the listed holidays falls on a Saturday, the preceding Friday shall be a regular work day.

R. Paid Holidays: New Year's Day, the day after or before New Year's Day, President's Day, Memorial Day, Independence Day, Labor Day, Thanksgiving Day, the Friday after Thanksgiving Day, Christmas Day, and the day after or before Christmas Day (10). If any of the listed holidays fall on Saturday, the preceding Friday shall be observed as the holiday. If any of the listed holidays falls on a Sunday, the day observed by the Nation shall be considered a holiday and compensated accordingly.

S. Paid Holidays: New Year's Day, Memorial Day, Independence Day, Labor Day, Thanksgiving Day, Friday after Thanksgiving Day, Christmas Day, the Day after Christmas, and A Floating Holiday (9). If any of the listed holidays falls on a Sunday, the day observed by the Nation shall be considered a holiday and compensated accordingly.

T. Paid Holidays: New Year's Day, the Day after or before New Year's Day, President's Day, Memorial Day, Independence Day, Labor Day, Thanksgiving Day, the Friday after Thanksgiving Day, Christmas Day, and The Day after or before Christmas Day. (10). If any of the listed holidays falls on a Sunday, the day observed by the Nation shall be considered a holiday and compensated accordingly. Any holiday which falls on a Saturday shall be observed as a holiday on the preceding Friday.

Note Codes

8. A. In addition to the hourly wage and fringe benefits, the following depth premiums apply to depths of fifty feet or more:
Over 50' To 100' -$2.00 per Foot for Each Foot Over 50 Feet
Over 100' To 150' -$3.00 per Foot for Each Foot Over 100 Feet
Over 150' To 220' -$4.00 per Foot for Each Foot Over 150 Feet
Over 220' -$5.00 per Foot for Each Foot Over 220 Feet

Note Codes Continued

8. C. In addition to the hourly wage and fringe benefits, the following depth premiums apply to depths of fifty feet or more:
Over 50’ To 100' -$1.00 per Foot for Each Foot Over 50 Feet
Over 100' To 150' -$1.50 per Foot for Each Foot Over 100 Feet
Over 150' To 200' -$2.00 per Foot for Each Foot Over 150 Feet
Over 200' -Divers May Name Their Own Price

D. Workers working with supplied air on hazmat projects receive an additional $1.00 per hour.

L. Workers on hazmat projects receive additional hourly premiums as follows -Level A: $0.75, Level B: $0.50, And Level C: $0.25.

M. Workers on hazmat projects receive additional hourly premiums as follows: Levels A & B: $1.00, Levels C & D: $0.50.

N. Workers on hazmat projects receive additional hourly premiums as follows -Level A: $1.00, Level B: $0.75, Level C: $0.50, And Level D: $0.25.

P. Workers on hazmat projects receive additional hourly premiums as follows -Class A Suit: $2.00, Class B Suit: $1.50, Class C Suit: $1.00, And Class D Suit $0.50.

Q. The highest pressure registered on the gauge for an accumulated time of more than fifteen (15) minutes during the shift shall be used in determining the scale paid.

R. Effective August 31, 2012 – A Traffic Control Supervisor shall be present on the project whenever flagging or spotting or other traffic control labor is being utilized. A Traffic Control Laborer performs the setup, maintenance and removal of all temporary traffic control devices and construction signs necessary to control vehicular, bicycle, and pedestrian traffic during construction operations. Flaggers and Spotters shall be posted where shown on approved Traffic Control Plans or where directed by the Engineer. All flaggers and spotters shall possess a current flagging card issued by the State of Washington, Oregon, Montana, or Idaho. These classifications are only effective on or after August 31, 2012.

S. Effective August 31, 2012 – A Traffic Control Supervisor shall be present on the project whenever flagging or spotting or other traffic control labor is being utilized. Flaggers and Spotters shall be posted where shown on approved Traffic Control Plans or where directed by the Engineer. All flaggers and spotters shall possess a current flagging card issued by the State of Washington, Oregon, Montana, or Idaho. This classification is only effective on or after August 31, 2012.

T. Effective August 31, 2012 – A Traffic Control Laborer performs the setup, maintenance and removal of all temporary traffic control devices and construction signs necessary to control vehicular, bicycle, and pedestrian traffic during construction operations. Flaggers and Spotters shall be posted where shown on approved Traffic Control Plans or where directed by the Engineer. All flaggers and spotters shall possess a current flagging card issued by the State of Washington, Oregon, Montana, or Idaho. This classification is only effective on or after August 31, 2012.

U. Workers on hazmat projects receive additional hourly premiums as follows – Class A Suit: $2.00, Class B Suit: $1.50, And Class C Suit: $1.00. Workers performing underground work receive an additional $0.40 per hour for any and all work performed underground, including operating, servicing and repairing of equipment. The premium for underground work shall be paid for the entire shift worked. Workers who work suspended by a rope or cable receive an additional $0.50 per hour. The premium for work suspended shall be paid for the entire shift worked. Workers who do “pioneer” work (break open a cut, build road, etc.) more than one hundred fifty (150) feet above grade elevation receive an additional $0.50 per hour.

THIS PAGE INTENTIONALLY LEFT BLANK

ATTACHMENT B

PROJECT PERMITS

(APPLICABLE PERMITS WILL BE PROVIDED AT THE PRE-CONSTRUCTION MEETING)

THIS PAGE INTENTIONALLY LEFT BLANK

KITSAP PUBLIC
HEALTH DISTRICT

345 6th Street, Suite 300
Bremerton, WA 98337
360-337-5235

HEALTH OFFICER DECISION

Application Type: Building Clearance

Memo Number: 319279
RP ACCT ID: 2368736
Expiration Date: 4/18/2016

SITE INFORMATION

Site Address - Street, City, Zip Code:	Assessor Tax Account Number:
8997 NE POINT NO POI, Hansville, WA 98340	22280210102002

APPLICANT INFORMATION

Name:	Phone Number:	E-Mail:
Ric Catron - Parks Project Coordinator		

Applicant Mailing Address - Street, City, State, Zip Code:
614 Division Street, MS-1, Port Orchard, WA 98366

CONTRACTOR OF RECORD

Company:	Phone Number:

HEALTH OFFICER DECISION FOR ONSITE SEWAGE SYSTEM

Approved (See Conditions Below)	Name of Inspector:	Date:
	ERIC EVANS, R.S.	04/07/2015

requires a pumping contract at time of inspection of installation.

HEALTH OFFICER DECISION FOR WATER SYSTEM

Approved (See Conditions Below)	Name of Inspector:	Date:
	ERIC EVANS, R.S.	04/07/2015

Final Application Decision: Accepted

KITSAP PUBLIC HEALTH DISTRICT

345 6th Street, Suite 300
Bremerton, WA 98337-1866
(360) 337-5235
FAX (360) 337-5291

Commercial Building Clearance

For Onsite Sewage Disposal & Water Supply

(Commercial BSA Addendum)

$ to be billed

Submittal Date	Memo Number	Review Fee	S.S.I.
MAR 20 2015	319279	$241	M

High Risk applications, necessitating a Waste Management Plan, require an additional hourly fee for review time. This may be determined at the time of submittal or billed during the review process.

The attached site plan requirements must be completed and submitted along with this application. Failure to complete the application form or to comply with the site plan requirements may result in processing delays or application denial. Prior to issuance, a determination of whether the existing sewage disposal system and water supply meets code and/or setback requirements is necessary. A copy will be forwarded to the jurisdictional Community Development Department or Planning Department.

A. APPLICANT AND PROPERTY INFORMATION Business Name

Company/Business Name: KIT. Co. PARKS & REC.	Business Park: NA	If Business Park, identify Building and/or Suite Number: NA
Property/Building Address Street: 8997 NE POINT NO POINT RD	City: HANSVILLE, WA 98340	
Assessors Account Number: 222802-1-010-2002 &	222802-1-005-2009	Property Size: 17.5 ACRES TOT
Applicant: RIC CATRON - PARKS PROJ. COORD.	Applicant Contact Phone #: (360) 337-5361	Applicant E-mail Address: rcatron@co.kitsap.wa.gov
Applicant Mailing Address Street City State Zip Code: 614 DIVISION ST, MS-1		
Property Owner: KITSAP COUNTY & POINT NO POINT LIGHT HOUSE	Contact Phone #: SAME	E-mail Address: SAME

B. COMMERCIAL ACTIVITY DESCRIPTION AND PROPOSED USAGE INFORMATION

PROPOSED ACTIVITY - describe commercial activity	Proposed Food Establishment? ☐ Yes ☑ No INSTALLATION OF PRE-ENGINEERED WATERLESS RESTROOM. SEE ATTACHED SITE PLAN AND STRUCTURAL PLANS FROM ROMTEC.				
NUMBER OF EMPLOYEES (current and/or proposed)	Full Time	Part Time	**Hours of Operation**	Days Open	Hours per day
RESIDENTIAL BUSINESS INFORMATION (If Applicable)	Number of existing bedrooms:		Number of current occupants:		
NEW PLUMBING PROPOSED ? ☐ Yes ☑ No	Describe new plumbing: ACCEPTED For Sewage and Water ONLY				
Proposed total wastewater gallons per day (GPD) NA	*Attach current water records for the past 6 months* Current GPD Usage: _____ + Proposed GPD Increase in flow: _____ = Total GPD _____				

Waste water constituents. Attach a waste management plan with MSDS sheets if applicable.
No wastes atypical of residential sewage may be discharged into an on-site sewage disposal system.

C. PROPOSED WATER SUPPLY AND SOURCE INFORMATION NA

Water Supply: ☐ Individual ☐ Two Party ☐ Public	Existing water source ☐ Yes ☐ No
Type of well or public water supply name	Water system ID number

D. SIGNATURE AND ACKNOWLEDGMENT

I certify that all of the information provided is accurate to the best of my knowledge, and I agree to all of the conditions set forth on the Building Clearance and KCBOH ordinances No. 2008A-01 and 1999-6. The plot plan must comply with the universal site plan. Failure to complete the application form or to comply with plot plan requirements may result in application denial.

Owner/Applicant Signature: Ric Catron	Date: 3.12.15

VICINITY MAP - **Indicate accurate detailed directions to the location of the property. Note distances in feet from roadways and/or intersections. Secondary site visits due to lack of site identification may result in additional review fees.**

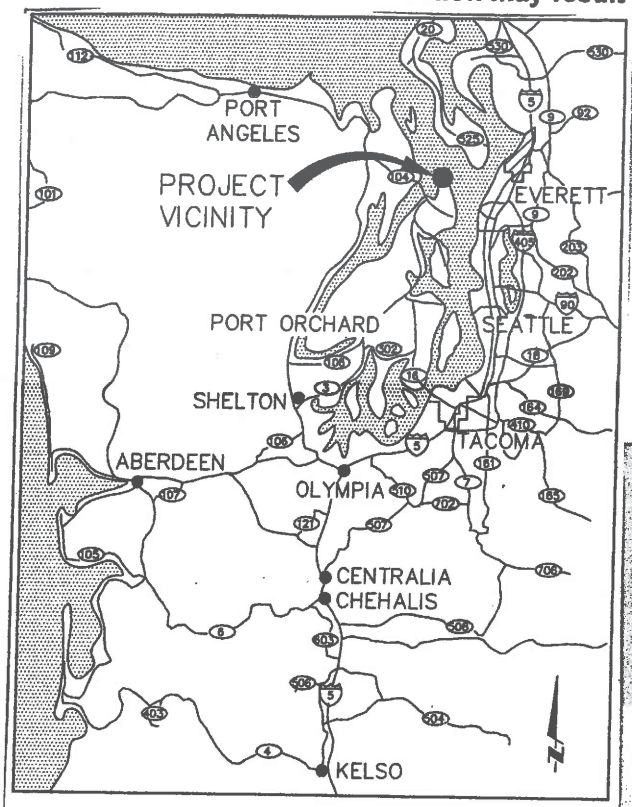

VICINITY MAP
NO SCALE

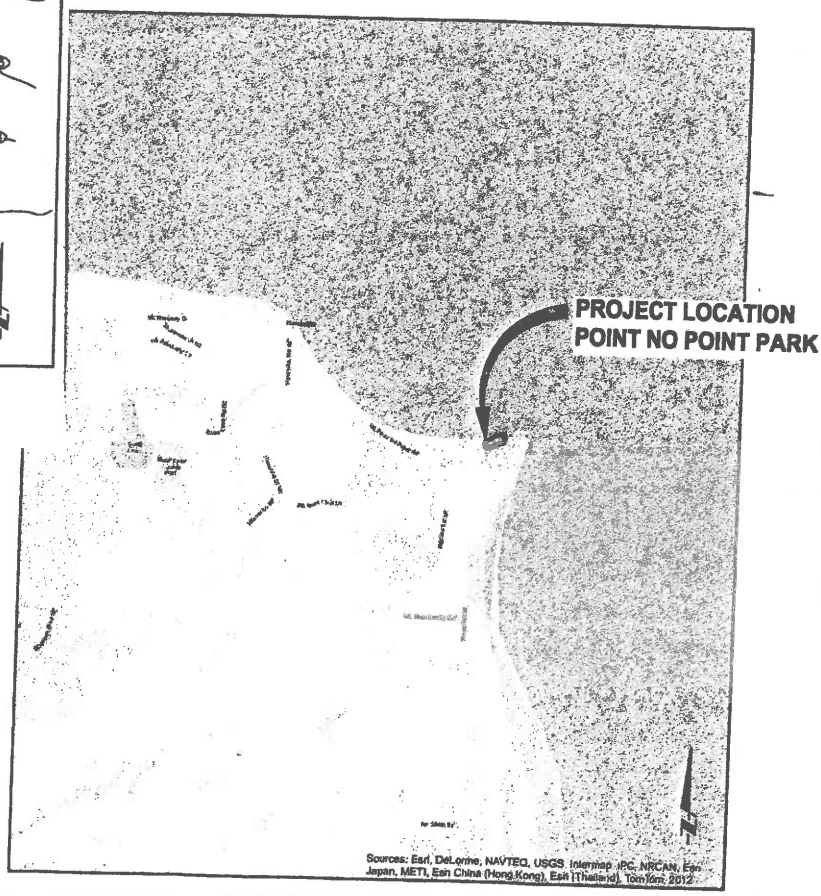

LOCATION MAP
NO SCALE

SPECIAL SITE CONDITIONS (dogs present, etc.)

NEW WATERLESS RESTROOM WILL BE LOCATED WHERE EXISTING PORTA-POTTIES AT POINT NO PARK ARE CURRENTLY LOCATED. SEE SITE PLAN.

THIS PAGE INTENTIONALLY LEFT BLANK

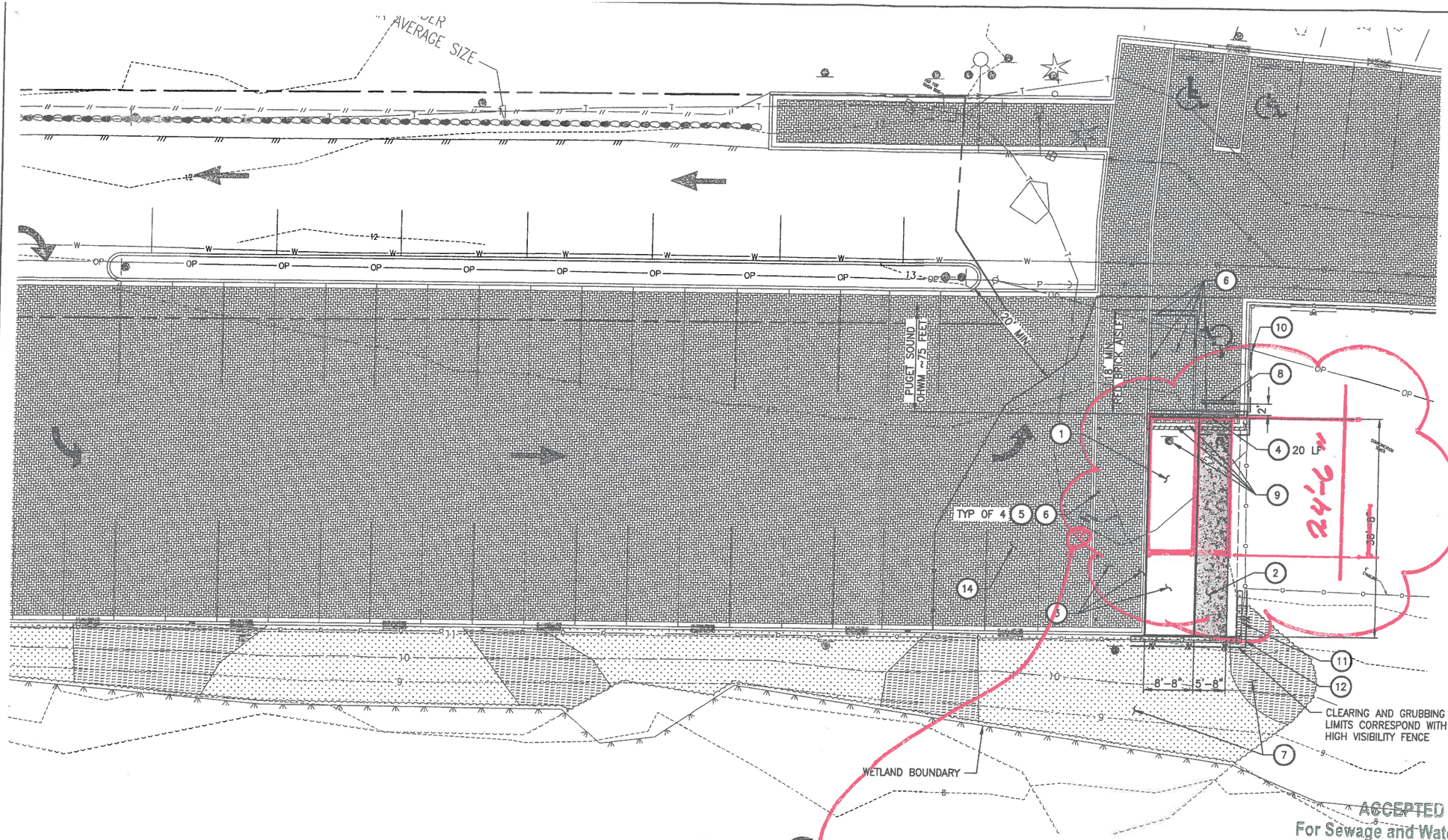

GENERAL NOTES:

1. DAMAGE TO EXISTING SITE FEATURES INCLUDING BUT NOT LIMITED TO PAVERS, CURBING, AND WETLAND BUFFER VEGETATION SHALL BE REPAIRED OR REPLACED TO ORIGINAL CONDITIONS TO THE SATISFACTION OF THE ENGINEER.
2. CONTRACTOR SHALL LIMIT ACTIVITIES AND EQUIPMENT PARKING TO WITHIN STAGING AREA WITH THE EXCEPTION OF PERSON VEHICLE PARKING (LIMITED TO 3 STALLS)

SETBACK NOTES:

1. DISTANCE FROM POLYETHYLENE VAULTS TO:
   - SURFACE WATER OHWM = APPROX 75 FEET
   - WELL = GREATER THAN 100 FEET

KEYNOTES:

1. PRE-ENGINEERED RESTROOM FLOOR SLAB FOOTPRINT. SEE ROMTEC BUILDING PLANS IN CONTRACT DOCUMENTS ATTACHMENT B.
2. CONCRETE WALK FOOTPRINT.
3. RESTROOM FINISH FLOOR ELEVATION SHALL MATCH EXISTING PAVER PATH AND CURB ELEVATION TO PROVIDE ADA ACCESSIBLE PATHWAY.
4. FLUSH CEMENT CONCRETE PEDESTRIAN CURB.
5. APPROXIMATE COLUMN FOOTING LOCATIONS. SEE BUILDING PLANS AND DETAIL 1/-
6. REMOVE AND REINSTALL PAVERS AS NEEDED INCLUDING RELOCATING ADA ACCESS AISLE IN RED BRICK. MATCH EXISTING PATTERS AND GRADES TO MAINTAIN ADA ACCESSIBILITY (CROSS SLOPES ≤ 1.5% IN ALL DIRECTIONS)
7. WETLAND BUFFER.
8. RELOCATE WHEEL STOP.
9. REMOVE EXISTING CURB, PAVERS AND SIGN POSTS, SALVAGE SIGNS AND REINSTALL (INCLUDING POSTS) AS DIRECTED BY ENGINEER.
10. CONNECT POWER TO EXISTING LIVE POWER AT 2" PVC RISER.
11. STRAW WATTLE.
12. HIGH VISIBILITY FENCE.
13. TEMPORARY 6' CHAIN LINK FENCE.
14. CONTRACTOR STAGING AREA.

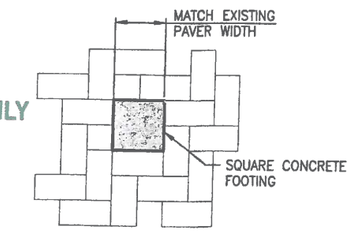

CONCRETE FOOTING FINISH SECTION 1 — NO SCALE

ACCEPTED
For Sewage and Water ONLY

RESTROOM REDUCED TO 2 STALLS FROM ORIG. 4 STALL LAYOUT.

03/20/15

RECEIVED
MAR 20 2015
KITSAP PUBLIC HEALTH DISTRICT

03/16/2016

PERMIT SET

Parametrix
4660 KITSAP WAY, SUITE A
BREMERTON, WASHINGTON 98312
T. 360.377.0014 F. 360.479.3851
www.parametrix.com

CONTROL POINTS	REVISIONS				SURVEYED: PMX
	No.	BY	DATE	DESCRIPTION	DESIGNED: DLD
					DRAWN: JLP
					CHECKED: JH
					CRP No.
					DATE: 03/11/15

DAVID L. DINKEL — STATE OF WASHINGTON — 35816 — REGISTERED PROFESSIONAL ENGINEER

KITSAP COUNTY — 18 57 — WASHINGTON

KITSAP COUNTY
PARKS DEPARTMENT
614 DIVISION STREET MS-1
PORT ORCHARD, WA 98366

POINT NO POINT PARK PRE-ENGINEERED RESTROOM

PRE-ENGINEERED RESTROOM SITE PLAN

KITSAP COUNTY, WASHINGTON
SECTION 15, TOWNSHIP 28 NORTH, RANGE 2 EAST, W.M.

SHEET 3 OF 3

U:\PSO\Projects\Clients\1578-KitsapCo\237-1578-140 PointNoPointParkRestroom\99Sheets\CADD\DWG\PSO1578140-C01.dwg JULIA PETERSON 8:22 AM 3/11/2015

ATTACHMENT C
GEOTECHNICAL INFORMATION

THIS PAGE INTENTIONALLY LEFT BLANK

POINT NO POINT - TEST PIT LOCATIONS

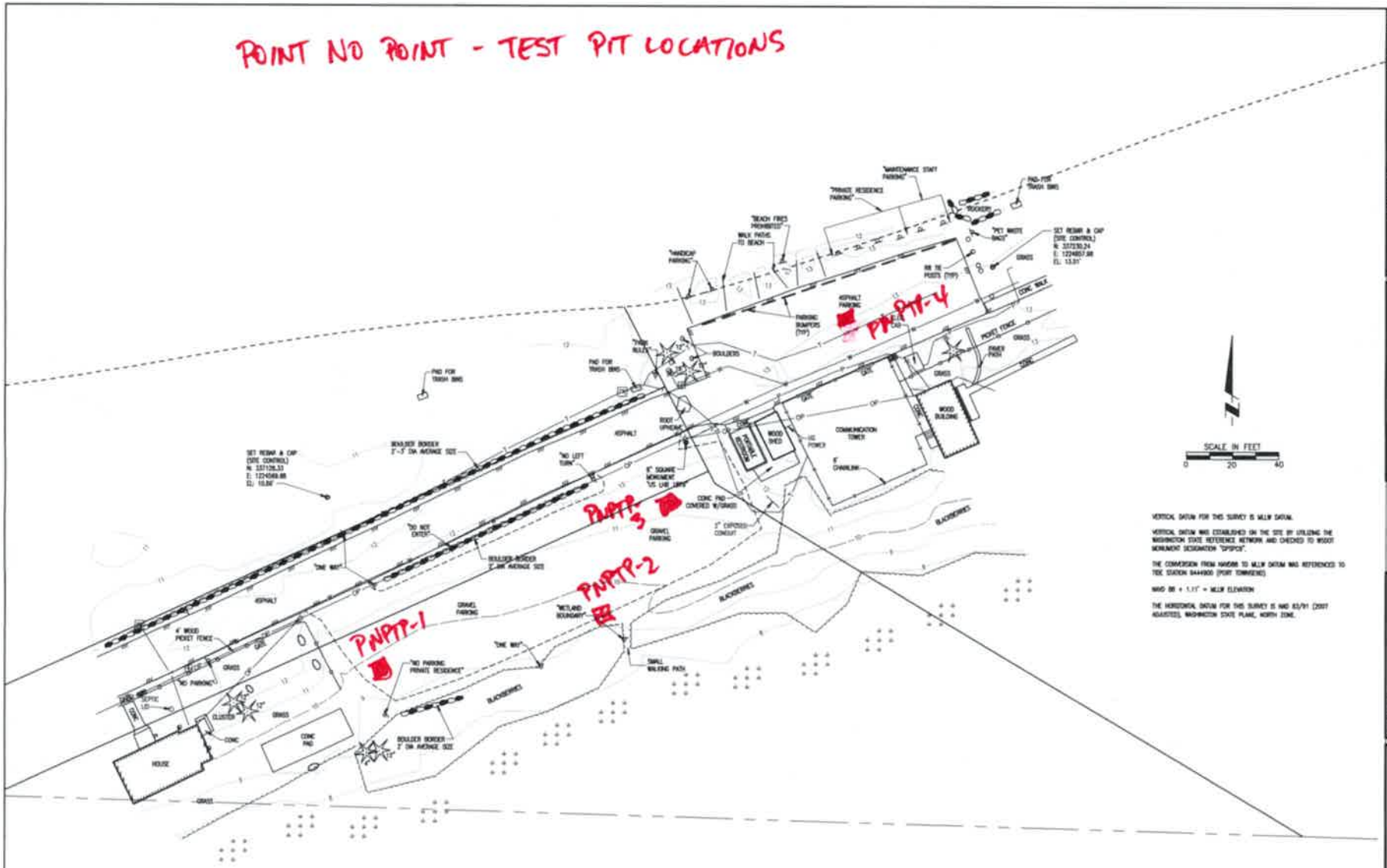

MAPPED SOIL TYPE - Alluvium & Beach Deposits

Parametrix

Test Pit Log

Project Number 236-1578-130
Project Name Kitsap County Parks Parking Retrofit LID
Location Point No Point
Excavation Equipment Mini- Excavator
Coordinates N47°54'41.28" W122°31'44.52"

Test Pit Number PNPTP-1
Date Completed 2/20/2013
Total Depth of Test Pit 4 ft
Water Level 4 ft
Logged By Jenifer Ramsey

Depth (ft)	Soil Classification	Description	Remarks
	SW	Gravel road base Layer (first 2 inches) SAND, gray loose, moist, occasional pieces of driftwood (<2%) (Marine Sand)	
4		Free water seen at 4 ft when soil was compressed, otherwise none observed but sand was wet	
		Bottom of excavation at 4 feet 	

Parametrix

Test Pit Log

Project Number 236-1578-130
Project Name Kitsap County Parks Parking Retrofit LID
Location Point No Point
Excavation Equipment Mini- Excavator
Coordinates N47°54'41.36" W122°31'43.59"

Test Pit Number PNPTP-2
Date Completed 2/20/2013
Total Depth of Test Pit 4 ft
Water Level 4 ft
Logged By Jenifer Ramsey

Depth (ft)	Soil Classification	Description	Remarks
	SW	Gravel road base Layer (first 2 inches) SAND, brown to gray, loose, moist, occasional pieces of driftwood (<2%), sand leaves brown stain while handling (Marine Sand)	
		Free water seen at 4 ft, coming from direction of wetland	
4		Bottom of excavation at 4 feet	

Parametrix

Test Pit Log

Project Number 236-1578-130
Project Name Kitsap County Parks Parking Retrofit LID
Location Point No Point
Excavation Equipment Mini- Excavator
Coordinates N47°54'41.96" W122°31'42.49"

Test Pit Number PNPTP-3
Date Completed 2/20/2013
Total Depth of Test Pit 4 ft
Water Level None Encountered
Logged By Jenifer Ramsey

Depth (ft)	Soil Classification	Description	Remarks
	SW	Gravel road base Layer (first 2 inches) SAND, gray, loose, moist, (Marine Sand)	
4		Bottom of excavation at 4 feet  	

Parametrix

Test Pit Log

Project Number 236-1578-130
Project Name Kitsap County Parks Parking Retrofit LID
Location Point No Point
Excavation Equipment Mini- Excavator
Coordinates N47°54'42.71" W122°31'41.91"

Test Pit Number PNPTP-4
Date Completed 2/20/2013
Total Depth of Test Pit 3.5 ft
Water Level None Encountered
Logged By Jenifer Ramsey

Depth (ft)	Soil Classification	Description	Remarks
		Asphalt Layer (first 2 inches) SAND (<5% fines), <10% gravel (0.25 to .5 inch diameter) brownish, loose, moist, (Fill)	
1.5	SW	SAND, gray, loose, moist, (Marine Sand)	
3.5		Bottom of excavation at 3.5 feet – stopped due to sloughing 	

THIS PAGE INTENTIONALLY LEFT BLANK

ATTACHMENT D
ROMTEC PLANS AND SPECIFICATIONS

THIS PAGE INTENTIONALLY LEFT BLANK

ROMTEC SCOPE OF SUPPLY AND DESIGN SUBMITTAL

FOR:

POINT NO POINT LIGHTHOUSE RESTROOM

PLAN SET #18574 (HANSVILLE, WA)

DATE: March 4, 2016

REVISION: 1

SUBMITTED TO:

Ric Catron
Kitsap County
614 Division Street, MS-1
Port Orchard, WA 98366
rcatron@co.kitsap.wa.us
(360) 337-5361

Romtec, Inc.
18240 North Bank Road, Roseburg, OR 97470
541-496-3541 ● 541-495-0803 (fax)
romtec1@romtec.com ● www.romtec.com

THIS PAGE INTENTIONALLY LEFT BLANK

March 4, 2016

To: Ric Catron,
Kitsap County

From: Romtec Operations
Re: Documentation for the proposed project identified as:

Project Name: Point No Point Lighthouse Restroom
Plan Set: 18574
Revision: 1

Romtec is pleased to offer this Scope of Supply and Design Submittal for the project listed above. All parties with an interest in this project must carefully read and comprehend the information contained herein.

1. **Introduction**
   Information about this document and how to use it.
2. **Romtec Products & Services**
   Lists products and services supplied by Romtec.
3. **Products & Services Not Supplied by Romtec**
   Lists products and services not supplied by Romtec.
4. **Warranty & Limitations**
   Includes the Romtec, Inc. limited warranty, limitations of Romtec's responsibilities, and copyright.
5. **Project Design**
   The current plan set, calculations (if plans are sealed) and product data sheets for the Romtec supplied building components.

Please address questions, comments and requests for changes to:

Romtec, Inc.
18240 North Bank Road
Roseburg, OR 97470
541-496-3541
romtec1@romtec.com

ROMTEC

SUBMITTAL APPROVAL

Project Name: Point No Point Lighthouse Restroom
Plan Set: #18574
Date: 3/4/16

By signing this Submittal Approval Form, I approve the products and services as specified in the Romtec Scope of Supply and Design Submittal. I understand that any change(s) to the project requested after delivery of this approval to Romtec will require a change order. Please initial where indicated and sign below.

Note: *If you are not the final owner or owner's representative, we strongly recommend that you gain approval from the owner or owner's representative so that all parties are in concurrence on the scope supplied.*

	SECTION	APPROVED	APPROVED WITH COMMENTS
1.	INTRODUCTION		
2.	ROMTEC PRODUCTS & SERVICES		
3.	PRODUCTS & SERVICES NOT SUPPLIED BY ROMTEC		
4.	WARRANTY & LIMITATIONS		
5.	PROJECT DESIGN		

Note: *Please review all color selections within the product data sheets and either confirm or request changes.*

(Signature) (Date)

(Print name) (Title)

ROMTEC

NOTICE TO PROCEED

Project Name: Point No Point Lighthouse Restroom
Plan Set: #18574
Date: 3/4/16

Upon receipt of your notice to proceed and all required documents, Romtec will produce the building and deliver it to the project site on the date you specify, within reasonable timelines, OR Romtec will ship your order approximately 6 - 8 weeks after the date of this notice, whichever is later. Romtec will send confirmation of delivery once the building leaves the Romtec yard and is en-route to the requested delivery site.

Note: *If no date is specified, Romtec will ship your order as soon as it is ready.*

Please fill in the form below and return it to Romtec.

☐ Yes, I want Romtec to produce the specified building and deliver it to the project site on the following date:

_____
(Requested delivery date)

_____
(Signature) (Date)

_____
(Print name) (Title)

_____
(Print company/agency name

ROMTEC

PROJECT CONTACTS

Please assist Romtec by filling in project contact information below.

Project Delivery Information:

Location (City, State): _____

Site Contact #1

Name & Cell Phone #: _____

Email: _____

Site Contact #2

Name & Cell Phone #: _____

Email: _____

Site Name (Park, Company, etc): _____

Site Address: _____

City, State Zip: _____

Directions to Site: _____

_____

_____

Owner Information: Owner of building. If same as Customer write "same."

Company/Agency/Org.: _____

Contact Name: _____

Title: _____

Address: _____

City, State Zip: _____

Office Phone: _____

Mobile Phone: _____

Email: _____

Architect/Engineer Information: Owner's representative.

Company: _____

Contact Name: _____

Title: _____

Address: _____

City, State Zip: _____

Office Phone: _____

Mobile Phone: _____

Email: _____

ROMTEC

PROJECT CONTACTS

Installer Information: Contractor installing the building.

Company: _____
Contact Name: _____
Address: _____
City, State Zip: _____
Office Phone: _____
Mobile Phone: _____
Email: _____

ROMTEC

BUILDING CODE COMPLIANCE CHECKLIST

Note: *This checklist is to be completed if applicable.*

Please list any local, non-state, non-federal codes that are unique to your city, municipality, county, etc. that may affect the design of this structure.

Project Name: Point No Point Lighthouse Restroom

Location (City, State): Hansville, WA

Who did you speak with to obtain the following information?

Name:_____

Title:_____

Phone:_____

Email:_____

Address:_____

_____

Are there any local codes different from UBC?

Building:_____

Plumbing:_____

Mechanical:_____

Electrical:_____

Accessibility:_____

Roof Snow Load:_____

Geotech Report Available (if yes please provide)? Yes_____ No___

Site Address:_____

City & State:_____

INDEX

1. INTRODUCTION

This section is structured as follows:

1.01 ABOUT THIS DOCUMENT

1. Document Identification

This Scope of Supply and Design Submittal (SSDS) provided by Romtec, Inc., herein referred to as Romtec, contains the information for the project listed below:

Project:	Point No Point Lighthouse Restroom
Location:	Hansville, WA
Document Date:	3/4/2016
Revision:	1

2. The Scope of Supply & Design Submittal is defined by Romtec as follows:

A. Complete document superseding all others

This document is Romtec's complete Scope of Supply and Design Submittal for the above project. There is no other document that contains this information. This document supersedes all other documents, correspondence and verbal communication as to Romtec's scope of supply for products and services.

B. Based on customer supplied design criteria

Romtec has designed the building described herein to meet the specific design criteria provided to Romtec by the customer and/or the customer's representative. Romtec's supply of products and services is related exclusively to these design criteria.

C. Supplied to customer only

Romtec supplies this document exclusively to the direct customer (the party signing Romtec's purchase order or the Government-issued purchase order), herein referred to as the customer, and not to any other party associated with this specific project. Any other party reviewing this document is informed that the information within it is Romtec's communication with the customer and no other party. Romtec's entire supply and design, as described herein, are for the customer only and no one else. Romtec will not provide any other products and/or services related to the building to any other party. Romtec agrees only to the supply and design described herein.

1.02 HOW TO USE THIS DOCUMENT

1. Be sure the document date and revision are current.

It is the responsibility of the person(s) using the SSDS to ensure that the latest revision of the document is being used. Contact Romtec if there is any question about the most current version.

Note: *The PDF provided is intended to allow for as many printed or electronic copies as needed. Please retain printed or electronic copies of these documents, including signed documents, for your records. It is not Romtec's responsibility to email, print, and/or send extra copies of documents that are included in the PDF.*

2. Carefully review all sections of this document.

A. Building Components

Customer shall review the plan set to ensure all building components are identified and located to customer's satisfaction. Customer is responsible for clearly marking any discrepancies and returning those markups to Romtec. Documentation of additional items not supplied by Romtec is customer's responsibility. At Romtec's option, locations and dimensions of such items supplied by others may be represented in the plan set. The customer is responsible for determining and maintaining the accuracy of all information pertaining to items represented in the plan set which are not supplied by Romtec.

B. Utility Location

At Romtec's option, the location of utilities entering the building may be shown on the plans for reference.

3. How to make comments and request changes.

Romtec **REQUIRES** the customer to provide a complete itemized list in the supplied comment log excel document, to recap **ALL** of the courtesy review comments that are noted on the redlined plans and product data sheets. Each redline comment must be numbered on the plan set/data sheet and correspond to an explanation on the written document. In addition, Romtec requires the customer to provide the redlined plan set and specific product data sheets with the noted changes.

4. Format

Romtec's plan sets are produced on 11" X 17" format. If another format is requested, there will be an additional fee depending on the format size and quantity requested. Romtec's content on each page, the order in which the pages appear, and the page numbering is final and will not change.

1.02 HOW TO USE THIS DOCUMENT

5. Plan Set Status: PRELIMINARY vs. FINAL

A. Preliminary

If the plan set within this Scope of Supply and Design Submittal is labeled “PRELIMINARY”, then this document should not to be used for construction or to pull permits and it is not suitable for any purpose other than to review, revise, and return to Romtec for the next round of submittals.

B. Final

If the plan set within this Scope of Supply and Design Submittal is labeled “FINAL”, then this document contains the entire final plan set for the Romtec building. The final plan set is to be submitted for approval by the reviewing authority (if applicable) and is for use in construction of the building.

6. Approval & notice to proceed

A. How to approve the SSDS

To approve the SSDS, you must fill in the Submittal Approval form. Please initial, date and sign where requested, and return to Romtec. Once you have approved the SSDS and provided Romtec with notice to proceed, Romtec will finalize the construction plans and produce the building.

B. Upon receipt of SSDS approval and notice to proceed

The customer agrees that, following customer’s approval of this document, there can be no modification to the products and services described herein without a written change order. The customer acknowledges that change orders will incur additional charges to the customer (i.e., additional production labor & overhead, design & engineering costs and charges for non-standard goods - goods that Romtec does not inventory - already purchased or incorporated into the order) and may cause delays in Romtec’s delivery of the products and services described herein as well as any products and services required by the change orders.

C. Allowance to perform is acceptance of this supply and design

By allowing Romtec to produce the order to the point of deliverability, the customer accepts this SSDS as the only document that defines Romtec’s offering associated with customer’s purchase order for products and services listed herein to be supplied by Romtec.

1.03 TYPICAL ROMTEC PROCESS

Below are the typical steps in the process to design, price, approve, produce, and deliver a Romtec building:

1. Customer (or customer's representative) works with Romtec to develop the design criteria for the project.
2. Romtec produces a preliminary design and quotation for the customer.
3. Customer sends purchase order to Romtec.
4. Romtec produces Scope of Supply and Design Submittal (SSDS) and sends to customer for review.
5. Customer reviews SSDS, sends written comments to Romtec.
6. Based on customer comments, Romtec revises the SSDS and issues change orders if necessary. Romtec resubmits to the customer.
7. Customer sends formal approval of SSDS to Romtec.
8. Customer sends Notice to Proceed with desired delivery date to Romtec.
9. Romtec begins manufacturing the building and sends projected delivery date to customer.
10. Customer's contractor prepares project site for installation of building.
11. Romtec delivers building to project site.
12. Customer's contractor installs building.

2. ROMTEC PRODUCTS & SERVICES

This section is structured as follows:

2.01 ROMTEC PRODUCTS

The plan set and product data sheets included in the SSDS define the products used in the Romtec building kit. The data sheets correspond with the bill of materials (packing list).

1. Product Data Sheets

The product data sheets for the products and materials Romtec provides in the building kit are published by the various product/material manufacturers. Romtec has made every effort to ensure the accuracy of the information contained in the product data sheets, however there may be discrepancies, since manufacturers can change their product specifications without notice to Romtec. Romtec reserves the right to make substitutions of equivalent materials and items without notice. Please contact Romtec if you have any questions about the information in the product data sheets.

2. Product Data Sheets Not Included

Product data sheets for Romtec supplied fasteners, anchor bolts, saddle brackets, hold downs, etc are not included. Refer to the plan set for location and size. These fasteners are included with the kit and are listed on the packing List. Typical fasteners such as nails, staples, screws, etc. are not supplied by Romtec. Please contact Romtec with any questions regarding supply.

Note: *Product data sheets for any items that are to be provided by installer or owner will NOT be provided in this document.*

3. Block

A. Romtec provides an 8% overage on each block shape and 10% for corner blocks. This is beyond the block quantities stated on the block sheets of the plans. Any additional block required by the installer can be ordered through Romtec with a change order.

B. The installer may be required to cut block to achieve the required shapes necessary for construction. For example, this can include notching block for bond beams or cutting full blocks in half. Not all block suppliers provide the same standard shapes. Romtec is not responsible for any additional work required of the installer.

4. Metal Roofing

A. Metal roofing on a building in a “corrosive environment” may lead to premature paint failure and rust problems. Metal roofing companies define a corrosive environment as either within a ¼ mile of a body of salt water like the ocean, or within proximity of an industrial process site like a paper mill where corrosive substances are present in the air and rain.

2.01 ROMTEC PRODUCTS

B. **Romtec does not provide a warranty for metal roofing.** Metal roofing manufacturers intend for their roofing to be installed immediately upon delivery from the factory. All project circumstances are different and Romtec cannot guarantee that metal roofing is installed within the timeframe allowed from the manufacturer. Therefore, Romtec does not warrant metal roofing unless it is from Custom Bilt Metals.

C. **Romtec will provide a warranty for metal roofing from the manufacturer Custom-Bilt Metals.** Custom-Bilt roofing is covered under Romtec's one year standard warranty assuming the following conditions are met and can be documented:

- **i.** Product cannot be wrapped in an airtight manner, i.e. shrink wrapped.
- **ii.** Product needs to have air movement available so no water is trapped between panels.
- **iii.** Product/crate needs to be stored with one end elevated to allow for runoff of any moisture or condensation that may develop.
- **iv.** The duration of jobsite storage will not exceed one year.

5. Trusses

A. Trusses provided by Romtec may or may not be delivered to the site with a boom truck for placement on the finished walls. Not all truss manufacturers include crane time in their supply. Romtec is not responsible for providing a crane for lifting the trusses at the building site. If limited crane time is included with the truss manufacturer's supply and the installer goes beyond the allotted time, it is the installer's responsibility to pay for this overage.

6. FRP Materials

A. If FRP panels are included in the design of this building, Romtec has also supplied the glue and pins for installation. Romtec has supplied a gallon of adhesive per panel which is significantly more than the manufacturer recommended two-thirds of a gallon per panel. Romtec has also supplied extra pins beyond the recommended amount per panel (see plans for installation instructions). If the installer uses more adhesive and/or pins than recommended, then it is the installer's responsibility to supply the additional materials.

2.01 ROMTEC PRODUCTS

7. Stone Veneer

A. Stone veneer will crack over time due to multiple factors including building settlement, water infiltration and freezing, wall movement, and other factors. Romtec cannot guarantee that the stone veneer on the building will not eventually crack. Romtec considers the repairing of cracks as a maintenance issue, and not a warranty issue. In other words, the stone veneer on the building will eventually crack and it will not be covered under the building warranty.

2.02 ROMTEC SERVICES

This section explains the engineering services provided by Romtec during the design of the building.

1. Design

A. Romtec develops plan sets

Romtec Engineering will develop a plan set based on initial information, design criteria and subsequent markups received from the customer. If more than one revision is requested and/or required, additional design fees will apply. If included in the Romtec proposal, one additional sealing of the plan set and calculations is submitted to the customer after review comments are received and responded to.

B. Romtec compiles and provides product data sheets

Romtec has a section in the SSDS for the components included in the Romtec building. Generally a component will be defined by its corresponding technical cut sheet and will include an image of product when available. The data sheet section defines the products included with the building kit and must be referred to in conjunction with the plans when reviewing the SSDS.

C. Romtec processes the customer redlines and review comments

Romtec processes the information from the markups the customer provides on the plans and product data sheets. The revisions are then made to ensure that the customer receives the building and features desired. Revisions to the SSDS are made solely at Romtec's discretion.

D. Additional copies, re-sealing, change in format request

If sealing of the plan set is included in Romtec's proposal, Romtec provides three identical sets of wet stamped drawings and calculations upon receipt of submittal approval and notice to proceed. Romtec's standard plan set format is 11" x 17". Charges for additional services may vary depending on the scope and quantity of the services requested and/or required.

2. Production

A. Production of the building kit

After receipt of submittal approval and notice to proceed, Romtec puts the approved scope of supply into production. All approved components are fabricated and packaged for delivery to the project site.

2.02 ROMTEC SERVICES

B. Truck Delivery

Delivery of the building requires access by a semi truck and trailer to the project site or to an alternate site that has been designated by mutual agreement between Romtec and customer. The customer shall inform Romtec in a timely manner of any potential problem accessing the delivery site, including size and weight limitations on any roads, bridges and driveways leading to the site.

Accommodation of special delivery requirements may result in an increase in the quoted shipping cost. Failure of the customer to notify Romtec of any special delivery requirement that results in delivery delays will result in additional shipping charges. Romtec is not responsible for installation delays resulting from delivery delays.

The building kit will be delivered to your “truck accessible” site by semi-truck, in shrink wrapped pallets, labeled with the project name and the stage of construction. The building installer is responsible for unloading the building kit and must have a forklift with minimum 6,000 lb. capacity and 6 ft. fork extensions to unload materials shipped from Romtec.

Note: Romtec is not responsible for any construction delays and subsequent costs if delivery is delayed by the trucking company. Romtec supplies the customer with estimated delivery dates to be confirmed by the shipping vendor. Re-mobilization costs for unloading trucks are to be disputed with the shipping vendor, not Romtec.

C. Shipping List

Romtec will send you a checklist of the items being shipped. Located inside Pallet #1, labeled “STAGE 1- PALLET A” you will find a checklist of parts for each building kit. An inventory of materials **MUST** be performed after receiving the building. If there are any missing or deficient materials, notification must be given directly to Romtec’s project manager within five (5) business days of delivery. If notification is not given within the five (5) day period, Romtec will assume that the order was complete and in good order. Contractor or agency takes full responsibility for any missing or deficient materials from that point forward.

Delivery Questions:
Floyd Sackett
Traffic Manager
Romtec, Inc.
541-496-3852,ext. 219.
fsackett@romtec.com

Materials Questions:
Dave Smith
Project Manager
Romtec, Inc.
541-496-3541 ext. 244
romtec11@romtec.

3. PRODUCTS & SERVICES NOT SUPPLIED BY ROMTEC

This section is structured as follows:

3.01 PRODUCTS NOT SUPPLIED BY ROMTEC

The specific products and materials to be supplied by Romtec are unique to this building and are shown in the product data sheets.

Unless otherwise specified, the following products and materials are NOT supplied by Romtec.

A. All items not listed in Romtec Products.
B. Any item listed as supplied by “installer”, “contractor”, “owner”, or “others”.

2. Unless specified in the plans or submittals, Romtec does not supply the following:

- Building installation
- Asphalt paving
- Masonry pavers
- Sidewalks
- Landscaping
- Site grading
- Cast-in-place concrete foundations, footings, interior slabs and exterior/entry slabs
- Concrete slab sealer
- Mortar
- Concrete grout
- Rebar
- Latex epoxy paint
- Caulk for siding
- Plumbing rough in, installation and trim
- Electrical rough in, installation and trim
- Drain valves and backflow check valves
- Branch circuit breakers
- Switches & outlets
- Fluorescent tubes for light fixtures
- Drinking fountain guardrails
- Wall hangers for toilets
- Typical fasteners; for example roofing nails, staples, etc.
- Fasteners not included in product packaging
- Irrigation Equipment
- Gutters and downspouts
- Fire alarm and fire suppression equipment
- Lighting equipment not attached to the building
- Clear coat finish for all decking, glulam beams, posts, and extensions
- Specialty tools including rivets guns and/or bending tools for metal roofing
- All other items indicated on final plans or required by building codes which are not specifically stated as supplied by Romtec.

3.02 SERVICES NOT SUPPLIED BY ROMTEC

The services to be supplied by Romtec are unique to this building.

Unless otherwise specified, services NOT supplied by Romtec include:

1. **Any item not listed in Romtec Services.**

2. **Installation of the Romtec building kit**

3. **Design and engineering services for aspects of the project not included in this SSDS, including but not limited to:**

   - Site engineering
   - Site drawings
   - Utility designs and plans
   - Additional plan sets
   - As-built plan sets
   - Operation and maintenance manuals
   - Other related documents and services

4. **Determination of the suitability of the building to the site plan, utilities plan(s) and other documents is not Romtec's responsibility.**

   This Scope of Supply and Design Submittal is limited to the Romtec building; however this document must be considered in its relationship with the overall site. It must be analyzed along with the building's site plan, utilities plan(s) and other documents. Romtec does not provide this analysis, which is the responsibility of the customer and/or the customer's representative. Romtec makes no claim and provides no guarantee that any of the products to be supplied by Romtec will fit on the building's site.

5. **Site Utilities & Other Considerations**

   Romtec will show utilities on the plans such as water, sewer/septic, electrical, gas/propane, etc. to ten (10) feet outside of the building footprint. It is the customer's responsibility to supply adequate water, sewer/septic, electrical and other necessary utility services to within ten feet of the building. Romtec does not supply any part of the utility equipment or connections to utility services, unless such additional work is included in this Scope of Supply and Design Submittal. If utilities are not supplied within the ten foot perimeter, the installer will stub out and cap utility connections to that point for future connection by others. In the event that utilities are not provided or are not operable at the time the building is substantially complete, final payment is due to Romtec. In other words, payment will not be held for any delays outside of Romtec's scope of work.

3.02 SERVICES NOT SUPPLIED BY ROMTEC

6. LEED/Green Submittals:

Romtec does not provide LEED/Green submittals as a standard service. Romtec can assist in providing documentation for products that may meet LEED/Green standards, but Romtec does not provide or fill out LEED credit forms. Unless specifically included in Romtec's proposal and quote, Romtec does not supply materials with the intent of meeting LEED standards. Any changes due to LEED or Green building requirements will result in a change order and increased lead times.

7. Special Inspection

If special inspection, as defined by code, is required per your Building Department or other regulatory agencies, then Romtec can assist but NOT provide this service. Romtec under no circumstance, shall be considered the special inspector, nor shall Romtec pay any fees associated with such. All such fees, costs, and arrangements associated with the special inspection are the responsibility of the owner.

8. As-Built Plan Sets

Romtec does not supply unsealed as-built plan sets as a standard service. Additional fees and lead times are required if unsealed as-built plans are requested.

9. Operation and Maintenance Manuals

Do not discard operation and maintenance manuals provided by some manufacturers in their packaging. If you misplace these manuals and request copies from Romtec, a service fee will be charged.

10. Review of Mix Designs:

Romtec does not provide mix design review for concrete used in construction as a standard service. If requested, Romtec will issue a change order for this service.

11. Site Storage

The owner or contractor must take great care in adequately protecting materials should they be stored for any period prior to installation. The packaging is meant to protect the building during shipment. The building is not packaged for storage. Moisture, direct sunlight and seasonal temperature fluctuations will result in damage to the materials.

The owner or contractor shall store the building in a secure, dry, climate controlled location. If the building is stored outdoors for more than thirty days without adequate protection from the elements, the Romtec Limited Warranty may be voided. If storing the building kit for an extended period,

3.02 SERVICES NOT SUPPLIED BY ROMTEC

all metal roofing must be unpackaged, separated, and completely dried to prevent moisture damage from prolonged storage (see manufacturer's storage requirements).

Delivery Questions:
Traffic Manager
Romtec, Inc.
541-496-3852,ext. 219.
fsackett@romtec.com

Materials Questions:
Project Manager
Romtec, Inc.
541-496-3541 ext. 244
romtec11@romtec.com

4. WARRANTY & LIMITATIONS

This section includes all information on Romtec's warranty and the limitations of Romtec's responsibilities.

This section is structured as follows:

4.01 ROMTEC, INC. LIMITED WARRANTY

ROMTEC, INC. LIMITED WARRANTY

Materials Manufactured or Installed by Romtec (Seller)

Seller warrants that it will, at its option and in its sole discretion, furnish, F.O.B. Roseburg, Oregon, a replacement for, repair or refund the purchase price to the owner of any goods of its manufacture or part or portion thereof proved to its satisfaction to be defective in workmanship or material (If Romtec is installing the materials, a warranty of 1 year from the date of final acceptance of the work shall apply to the installation work) under normal use and service within one year from the date of final acceptance by the customer or property owner or 1 year and 6 months from the date of delivery (or the date Romtec could have delivered should the customer request and Romtec agree to store the goods for an agreed upon time) to the customer or property owner whichever comes first, provided that notice of such defect is given to Seller within such limited period.

There is no implied warranty of merchantability or implied warranty of fitness for a particular purpose or any other warranty, express or implied, labor, transportation or other costs or expenses relating to such replacement or such repair, including any indirect, incidental, delay or consequential damages.

Components Resold or Supplied with Romtec Materials

Certain components are warrantable directly by the original manufacturer for periods between 90 days and 1 year. The term of such warranties are identified in accompanying documentation. Replacement for, repair or refund of defective workmanship or material under normal use shall be remunerated directly with the manufacturer of the component. Examples of components would be locksets, plumbing fixtures, electrical fixtures, etc.

This warranty extends only to Romtec's direct customer (as named in the Romtec Purchase Order) herein called "customer" and not to any person or entity with whom customer has business relationships, or any party other than customer.

Claims

The following provisions apply to all claims.

a. Freight Damage Claims

If Romtec is not installing and agrees to ship goods under any agreement whereby Romtec remains responsible for risk of loss or damage while the goods are in transit, any claims of customer for damage in transit shall be deemed waived and released by the customer, unless made in writing endorsed on the bill of lading at the time customer accepts delivery of the merchandise. CUSTOMER SHOULD CAREFULLY INSPECT THE MERCHANDISE BEFORE ACCEPTING DELIVERY.

b. Claims of Defective Manufacture

4.01 ROMTEC, INC. LIMITED WARRANTY

Claims that the merchandise was incorrectly manufactured or that is defective in any way must be made directly to Romtec on a product-by-product basis. All claims must be made within 72 hours of the defective condition, or the time when the defect should have been discovered, whichever is earlier. All claims must include the following:

1. Detailed description of the specific problem, failure, or other event giving rise to the claim.
2. Supporting photographs or videos.
3. Specific location.
4. Names and phone numbers of individuals who can substantiate the claim but who do not work for customer.

c. Claims for Missing Materials

If Romtec is not installing, the customer must inventory the shipment of materials upon arrival at the job site for completeness. Claims for missing or deficient materials shall be reported to Romtec within 5 business days of delivery. If Romtec does not receive notice of missing or deficient materials within the 5 business days Romtec will assume that all the materials were present and in good order. After the 5 day period the customer assumes responsibility for any missing or deficient materials.

d. Claims for Damaged Materials Stored Prior to Installation

Building Materials are packaged for shipment only and should be installed within 30 days of delivery. If Romtec is not installing or delayed by customer from installing, and the materials are stored outdoors for more than 30 days, all warranties expressed or implied are null and void. Customer assumes all responsibility in adequately protecting stored materials prior to installation and hereby releases Romtec from any claims arising from inadequately protected materials.

e. Action in Event of Established Claim

Liability of Romtec shall be limited to, at its option, repair or replacement of the goods.

f. No Third Party Claims

Under no circumstance shall Romtec be responsible for any damage claims by any party other than claims by Romtec direct customers.

Release and Hold Harmless

Customer releases and agrees to defend, indemnify, and hold Romtec harmless from and against any and all claims, demands, actions, and causes of action for any matters arising out of or connected with the Materials whereby the customer is responsible for errors or omissions.

4.02 LIMITATIONS OF ROMTEC'S RESPONSIBILITIES

1. Romtec is the building designer and building kit supplier.

Within this document are references to "Romtec" and "Installer." Romtec is the building designer and building kit supplier. "Installer" or "Contractor" is the party erecting the building, NOT Romtec.

2. Romtec's responsibilities are to its direct customer only.

Romtec will communicate with project subcontractors, engineers, owners and any other parties only through a designated representative of the customer.

3. Complete review of this document will require information contained in other documents not supplied by Romtec.

Romtec does not supply various documents related to the project such as the site plan, topographical map, the utilities plan and other documents. These documents are generally supplied by the owner or agency that put the project out to bid.

Thorough understanding of the environment in which the building will be installed and operated requires complete knowledge of information included in these related documents.

Such documents may have been supplied to Romtec by the customer and by other parties on behalf of the customer. Romtec has taken the information in these documents as fact. However, Romtec does not know the accuracy, nor take any responsibility for any information included in any of these other documents.

The discovery of any error or omission in documents supplied to Romtec by any party on behalf of the customer may require, solely at Romtec's discretion, issuance of a change order to cover associated changes in the building design and materials, delays in delivery and installation of the building and/or additional charges to the customer by Romtec.

Romtec shall not be liable for any deficiency in the building design, materials (products and components), building kit delivery, building installation and/or any other part of the project that results from any error or omission in documents supplied to Romtec by the customer and by other parties on behalf of the customer at any time.

4. Compliance with building codes is limited

This Scope of Supply and Design Submittal may contain references to various building codes applicable at the time this document was produced. Romtec's responsibility to meet the requirements contained in these codes extends only to the revisions of these codes listed in this document. Any change to the building design and/or materials, components or products resulting from a revision of a building code occurring after this document is approved will result in a change order.

4.02 LIMITATIONS OF ROMTEC'S RESPONSIBILITIES

Local building departments reserve the right to modify national building codes to meet the needs of their area. There is no way for Romtec to always know what the requirements of the reviewing authority will be. Romtec has made every effort to meet local codes. Any revision to the design after submittal approval and notice to proceed will result in a change order.

If the customer does not notify Romtec, at or before the customer provides Romtec with SSDS approval and notice to proceed, of any building codes/regulations unique to customer's area that are not included in state or national codes, a change order will be issued for any costs Romtec incurs in order to comply with such codes or irregularities.

If health department permits are required for any food related services within the building, Romtec encourages the customer to submit preliminary plans for review and comments before the plans are sealed and the building is produced. Any changes to the design after submittal approval and notice to proceed, resulting from a health department review, will result in a change order.

5. **Romtec is not responsible for the review or understanding of this document by the customer, the customer's representative, architects, engineers and others associated with the project.**

   The customer, architects, engineers, owner and all other parties interested in the project are urged to contact Romtec at any time, with any questions about the building described herein, or about Romtec's responsibilities related to the project.

   Romtec will make every effort to ensure that all parties have access to complete information about the building; however, Romtec is not responsible for the distribution of this document and/or misunderstandings, errors and costs that arise from an incomplete understanding by any party, of the information contained in this document, including past revisions of this document.

6. **Romtec evaluates ADA guidelines only within the footprint of the Romtec structure supplied.**

   The building structure described herein is designed to ADA guidelines. Romtec does not evaluate ADA compliance beyond ten feet from the building perimeter. The customer is responsible for complying with ADA guidelines to and from the Romtec structure.

7. **Site Conditions**

   Except for those site conditions expressly stated in this Scope of Supply and Design Submittal, Romtec has no knowledge of existing conditions at the project site. If at any time it is determined by Romtec that any condition at the project site that was not previously disclosed to Romtec may affect the design of the building, the materials supplied and/or the building installation,

4.02 LIMITATIONS OF ROMTEC'S RESPONSIBILITIES

Romtec may, at its discretion, issue change orders to accommodate all necessary changes to the building and/or the installation. Such change orders will result in additional charges by Romtec to the customer and possibly delay of project completion.

A. Site Topography

Unless otherwise stated in this document, the building site shall be level and the finish grade of the ground around the building site shall slope away from the building for drainage. Romtec has assumed this in the building design.

If the site is not level or lacks sufficient drainage, Romtec requires that a site plan with topography be delivered to Romtec operations before final approval and sealing of the building plans by Romtec.

B. Site Water & Drainage

In addition to the finish grade sloping away from the building as mentioned above, additional measures to control surface water and groundwater at or near the site may be required.

Although Romtec does not know of specific site conditions that may require such analysis, a geotechnical report from a qualified engineer may be necessary. If a report is necessary, Romtec requires that the report be delivered to Romtec operations before the final approval and sealing of the building plans in order to review the basis of design for soil bearing. Any re-design or request for change after plans are approved will result in a change order.

A report of excess surface water or groundwater at the site delivered to Romtec after the plans have been sealed will result in a change order and additional charges to the customer for re-design and re-sealing of the plans.

Note: *Romtec does not supply or install rain gutters, downspouts or rain-water drain lines with the building. If these are to be supplied and installed by others, the discharge of water from drain lines must be far enough away from the building so as to not affect the soil around or under the building.*

C. Site Soil Bearing

Unless otherwise stated in this document, the soil on which the building will be constructed shall support a minimum of 1500 pounds per square foot. Romtec has assumed this in the building design.

A report of inadequate soil conditions at the site delivered to Romtec after the plans have been sealed will result in a change order and

4.02 LIMITATIONS OF ROMTEC'S RESPONSIBILITIES

additional charges to the customer for re-design and re-sealing of the plans.

Note: *If Romtec receives signed approval documents, and seals the plan set and calculations, and is then sent a soils report which requires a re-sealing or re-design, this will incur a change order.*

D. Disposal of Packaging, Extra Building Materials

Installer is responsible for disposal of any of the building kit's packaging materials and any extra building materials supplied by Romtec or installer that are left over from installation of the building. Packaging and materials not supplied by Romtec or installer are not the responsibility of installer. Prior to building installation, customer shall inform Romtec of any recycling requirements and/or disposal limitations.

Accommodation of special recycling requirements that are communicated to Romtec after the plans have been finalized may result in a change order and additional charges for this service.

E. Disposal of Previously Contaminated Digging Spoils and Other Site Debris

Under no circumstance is Romtec or the installer responsible for the previously contaminated soil or other materials originating on the project site. Prior to any site excavation, customer shall inform Romtec of the condition of soil and/or other materials at the site. Customer shall disclose to Romtec any regulations, limitations or findings of any kind that are related to the condition and/or to its distribution and/or disposal of site soil and/or other materials.

If at any time it is determined by anyone that, for any reason, the soil or other materials at the site require special handling of any kind, it shall become the responsibility of the customer to execute and pay for such special handling.

In the event of discovery of previously contaminated site materials requiring special handling, Romtec reserves the right to stop work on the project and inform the customer and/or regulatory authority of the discovery. Work stoppage due to discovery of site materials requiring special handling shall not be grounds for delay claims by customer against Romtec or Installer.

F. Underground Lines

Romtec and/or installer shall not be responsible for the location, disturbance, or damage of any unidentified and/or unknown underground lines of any kind. Romtec and/or installer shall only be

4.02 LIMITATIONS OF ROMTEC'S RESPONSIBILITIES

responsible for underground lines or utilities identified and located by regulatory agencies whose responsibility is to identify and locate such lines and utilities. Any costs associated with any action which results from the incidental discovery, disturbance, or damage of any previously unidentified and/or unknown underground lines or utilities of any kind, including any pipeline or other transportation conduit, shall be solely the customer's responsibility to bear.

8. Romtec does not submit for or pay fees for building permits.

As required by building codes and the reviewing authority, customer shall submit the plan set and product submittals to the reviewing authority for approval (if applicable). Customer shall pay all charges related to the plan set review and building permit(s). Customer shall notify Romtec that building permit(s) and final approved plan set are available. No other documents shall be used for installation of the building.

9. Installation time is not specified.

Romtec designs and manufactures its buildings for quick and complete installation. However, Romtec makes no representation as to how long it will take to prepare the site, install the building, connect the building's electrical systems to utilities not supplied by Romtec, or to receive final approval of the completed building form regulatory agencies.

10. Romtec is not responsible for determining the methods and equipment used in site preparation and installation.

All methods and equipment used at the site are the responsibility of the installation contractor/subcontractors, not Romtec. Romtec does not know or specify what site preparation or component installation methods or equipment should or will be used.

11. Implementation of the building plans contained in this document requires a thorough knowledge of applicable national, state and local building codes and methods of construction required for the building.

Romtec is not responsible for ensuring that every conceivable construction detail or site condition is reflected in the plans or that the customer, customer's representative, building installer and trade subcontractors have the necessary knowledge of applicable codes to perform construction and/or installation work required by such codes.

12. Discrepancies

During the installation of the building, if the installer discovers a discrepancy in the plans, missing materials, or a shortage of materials, installer is to notify Romtec immediately and report the problem before proceeding. Romtec will then advise the installer on a course of action.

4.02 LIMITATIONS OF ROMTEC'S RESPONSIBILITIES

Note: *If the installer purchases materials to replace missing or shorted items without notifying Romtec or having Romtec's approval, Romtec will not be liable for reimbursement.*

13. Code Issues

If during construction of the building the inspector declares a discrepancy or code issue, the contractor is to contact Romtec immediately and report the problem before proceeding.

14. Theft or Vandalism

In the event of theft or vandalism, please notify Romtec. Romtec is not responsible for losses of materials/equipment due to theft or vandalism. Romtec will assist in replacing lost material.

15. Metal Roofing

Romtec does not provide a warranty for metal roofing. Metal roofing manufacturers intend for their roofing to be installed immediately upon delivery from the factory. All project circumstances are different and Romtec cannot guarantee that metal roofing is installed within the timeframe allowed from the manufacturer. Therefore, Romtec does not warrant metal roofing unless it is from Custom Bilt Metals.

Romtec will provide a warranty for metal roofing from the manufacturer Custom-Bilt Metals. Custom-Bilt roofing is covered under Romtec's one year standard warranty assuming the following conditions are met and can be documented:

- Product cannot be wrapped in an airtight manner, i.e. shrink wrapped.
- Product needs to have air movement available so no water is trapped between panels.
- Product/crate needs to be stored with one end elevated to allow for runoff of any moisture or condensation that may develop.
- The duration of jobsite storage will not exceed one year.

16. Stone Veneer

Stone veneer will crack over time due to multiple factors including building settlement, water infiltration and freezing, wall movement, and other factors. Romtec cannot guarantee that the stone veneer on the building will not eventually crack. Romtec considers the repairing of cracks as a maintenance issue, and not a warranty issue. In other words, the stone veneer on the building will eventually crack and it will not be covered under the building warranty.

4.03 COPYRIGHT

These copyrighted documents and the building designs and design concepts contained within these documents are the exclusive property of Romtec, Inc., which reserves all rights to their communication, distribution, reproduction, revision and use. These construction drawings and/or these designs may not be communicated, distributed, reproduced, revised or adapted in any way without the express written consent of Romtec, Inc. Any use of these plan sets and/or designs for any purpose other than the construction of this specific building order supplied by Romtec, Inc. is prohibited.

5. PROJECT DESIGN

This section is structured as follows:

5.01 PLAN SET

Current plan set to follow.

THIS PAGE INTENTIONALLY LEFT BLANK

ROMTEC

PLAN SET NO

18574

1014 SST ASPEN STRETCH RESTROOM

POINT NO POINT LIGHTHOUSE RESTROOM
HANSVILLE, WASHINGTON

3/03/2016

CERTIFIED BATHROOM DESIGNER
CBD
Cassandra Ruport
CBD
ID #1063772
★ NKBA ★
Cassandra Ruport

EXPIRES: 12/31/2016

Precision Structural Engineering, Inc.
www.structure1.com
Klamath Falls Office
250 Main Klamath Falls, Oregon 97603
Phone: (541) 850-6300 Fax: (541) 850-6233
info@structure1.com
ROMTEC16-17

ROMTEC
1624O NORTH BANK ROAD
ROSEBURG, OR 97470
(541)-496-3541 FAX (541)-496-0803

PROJECT: 1014 SST ASPEN STRETCH RESTROOM
POINT NO POINT LIGHTHOUSE RESTROOM
HANSVILLE, WASHINGTON

SHEET TITLE: TITLE SHEET

PLAN SET# 18574

DATE: 04/13/2015

REVISIONS

REV.	DATE:	BY

DRAWN BY: CR

SHEET NO. G0

NOTE:
ARCHITECT/ENGINEER IS NOT RESPONSIBLE FOR ANY SITE DESIGN OR ENGINEERING AND WILL NOT BE HELD ACCOUNTABLE OR LIABLE FOR ANY ISSUES RELATED TO THIS SITE. IT IS THE OWNER'S RESPONSIBILITY TO ACCURATELY LOCATE THIS BUILDING, SET FLOOR AND ADJACENT ELEVATIONS, DETERMINE SITE IS SUITABLE FOR CONSTRUCTION, VERIFY ALL UTILITIES, ETC.

ROMTEC
18240 NORTH BANK ROAD - ROSEBURG, OR 97470
(541)-496-3541 FAX (541)-496-0803

CUSTOMER: KITSAP COUNTY CONTACT RIC CATRON
LOCATION: POINT NO POINT RD. NE
LOCATION: HANSVILLE, WA 98340

5-3-16
WABIL M. [illegible]
STATE OF WASHINGTON
41133
REGISTERED
PROFESSIONAL ENGINEER
EXPIRES 7-17

GENERAL NOTES:

1. ALL WORK SHALL CONFORM TO STATE & LOCAL CODES AND ORDINANCES, AND SHALL COMPLY WITH THE 2009 ANSI A117 STANDARDS AND THE 2012 IBC STANDARDS. ALL WORK SHALL MEET OR EXCEED INDUSTRY STANDARDS FOR MATERIALS, WORKMANSHIP, ETC.

2. CONTRACTOR SHALL REVIEW THE DRAWINGS THOROUGHLY BEFORE PROCEEDING WITH ANY WORK. ANY DISCREPANCIES FOUND WITHIN THESE DOCUMENTS SHALL BE BROUGHT TO THE IMMEDIATE ATTENTION OF ROMTEC. CONTRACTOR SHALL NOT PROCEED WITH ANY WORK HE KNOWS TO BE IN CONFLICT WITH OTHER WORK, OR IS NOT APPROVED BY CODE, UNTIL RESOLVED BY ROMTEC OR THE ENGINEER/ARCHITECT.

3. CONTRACTOR SHALL MAINTAIN GENERAL LIABILITY INSURANCE AND WORKER'S COMP. INSURANCE.

4. FOOTINGS SHALL BE CONSTRUCTED ON UNDISTURBED NATIVE SOIL OR ENGINEER APPROVED FILL. CONTRACTOR TO VERIFY ASSUMED SOIL BEARING CAPACITY NOTED ON SHEET G2. SHOULD SOIL NOT MEET OR EXCEED THE ASSUMED SOIL BEARING CAPACITY, CONTRACTOR TO MODIFY SOIL CONDITIONS TO SATISFY CRITERIA OR NOTIFY THE STRUCTURAL ENGINEER TO REVISE DESIGN PER CONDITIONS ENCOUNTERED. BACKFILL AROUND BUILDING TO PROVIDE SLOPE AWAY FROM BUILDING NOT LESS THAN A 2% SLOPE FOR A MINIMUM DISTANCE OF 10' FROM THE BUILDING, PER 2012 IBC 1804.3.

5. CAST-IN-PLACE CONCRETE: 3000 PSI MINIMUM COMPRESSIVE STRENGTH AT 28 DAYS 4" +/- 1" SLUMP, WITH MAX 3/4" AGGREGATE, AND ALL MATERIALS TESTED IN ACCORDANCE WITH ACI 318 STANDARDS. FINE BROOM FINISH INTERIOR SURFACES AND EXTERIOR SLABS. JOINTS REQUIRED IN FLAT WORK, SEE SHEET A5.1 FOR REQUIREMENTS.
CMU BLOCKS ARE MANUFACTURED TO ASTMC90-02 STANDARDS WITH A MIN COMPRESSIVE STRENGTH Fm = 1500 PSI. ALL CMU BLOCKS MUST BE FULLY GROUTED AND NOT BE WETTED.
MASONRY (CONCRETE) GROUT: 2500 PSI MINIMUM COMPRESSIVE STRENGTH AT 28 DAYS 9" +/- 1" SLUMP, WITH MAX 1/2" AGGREGATE, AND TESTED IN ACCORDANCE TO MEET ACI 318. FINE OR COURSE GROUT MAY BE USED IN ACCORDANCE WITH 2012 IBC.

6. ANCHOR AND MACHINE BOLTS SHALL BE ASTM A307. SCREWS AND MACHINE BOLT CALLOUTS ARE MINIMUM SIZE ALLOWED, ACTUAL SIZE MANY VARY. TS STEEL BEAMS SHALL BE ASTM A500 GRADE B, Fy = 46 ksi. WIDE FLANGE BEAMS SHALL BE ASTM A992, Fy = 50 ksi. STEEL PLATES & SHAPES SHALL BE ASTM A36, Fy = 36 ksi. CONCRETE REINFORCING STEEL (REBAR): 60 ksi. (GRADE 60). WOOD FRAMING SHALL BE #2 & BTR DOUGLAS FIR, UNO.
GLU-LAM BEAMS SHALL BE GRADE 24F-V4.

7. QUESTIONS CONCERNING MATERIALS OR CONSTRUCTION CONTACT ROMTEC TECHNICAL ASSISTANCE AT: 541-496-3541

8. ROMTEC SCOPE SUPPLY AND DESIGN SUBMITTAL (SSDS) IDENTIFY SPECIFIC MODEL, MANUFACTURER & BRAND OF ALL PLUMBING AND ELECTRICAL FIXTURES AND ACCESSORIES. REFER TO THE SSDS FOR SPECIFIC LIST OF ITEMS SUPPLIED BY ROMTEC, ANY ITEMS NOT LISTED IN THE SSDS IS ASSUMED SUPPLIED BY THE INSTALLER.

9. THE OWNER / CONTRACTOR MAY EXERCISE DISCRETION IN SELECTING THE FINAL LOCATION FOR NON-DIMENSIONED ACCESSORIES AND FIXTURES (E.G., LIGHTS, COMFORT HEATERS, ETC.)

ABBREVIATIONS

AB	ANCHOR BOLT	L	STRUCTURAL STEEL ANGLE	SD	SOAP DISPENSER
AFF	ABOVE FINISHED FLOOR	LAV	LAVATORY	SIP	STRUCTURAL INSULATED PANEL
ATS	AUTOMATIC TRANSFER SWITCH	LF	LIGHT FIXTURE	SJ	SAW JOINT
BOT	BOTTOM	MBP	MAIN BREAKER PANEL	SM	SHEET METAL
BP	BREAKER PANEL	MD	MAIN DISCONNECT	S4S	SURFACED FOUR SIDES
CJ	CONTROL JOINT	MIN	MINIMUM	SS	STAINLESS STEEL
CO	CLEAN OUT	MIR	MIRROR	SST	STRUCTURAL STEEL TUBE
CMU	CONCRETE MASONRY UNIT	MO	MASONRY OPENING	TBD	TO BE DETERMINED
db	NOMINAL BAR DIAMETER	MR	METAL ROOFING	T&B	TOP & BOTTOM
DD	DIAPER DECK	MS	MILD STEEL	T&G	TONGUE & GROOVE
DIA	DIAMETER	ND	NAPKIN DISPOSAL	TLT	TOILET
DISC	DISCONNECT	NTS	NOT TO SCALE	TP	TOILET PAPER DISPENSER
EM	ELECTRIC METER	OC	ON CENTER	TS	TIMER SWITCH
EW	EACH WAY	OCEW	ON CENTER EACH WAY	TSCD	TOILET SEAT COVER DISPENSER
FD	FLOOR DRAIN	OSB	ORIENTED STRAND BOARD	TYP	TYPICAL
FF	FINISHED FLOOR	P	PHOTO EYE	UNO	UNLESS NOTED OTHERWISE
FG	FINISHED GRADE	PCC	PORTLAND CEMENT COMPANY	VB	VAPOR BARRIER
FRP	FIBERGLASS REINFORCED PANEL	PL	PLATE	VTR	VENT THROUGH ROOF
GB	GRAB BAR	PSF	POUNDS PER SQUARE FOOT	WH	WATER HEATER
GLB	GLUE LAMINATED BEAM	PSI	POUNDS PER SQUARE INCH	WWM	WOVEN WIRE MESH
HB	HOSE BIBB	PT	PRESSURE TREATED	W/	WITH
HD	HAND DRYER	PTD	PAPER TOWEL DISPENSER		
HM	HOLLOW METAL (DOOR)	PV	PHOTO VOLTAIC		
HTR	HEATER	R4S	ROUGH FOUR SIDES		
HYP	HYPOTENUSE	REQD	REQUIRED		
I.S.	INSTALLER SUPPLIED	RO	ROUGH OPENING		
KSI	KIPS PER SQUARE INCH	SCH	SCHEDULE		

SYMBOL LEGEND

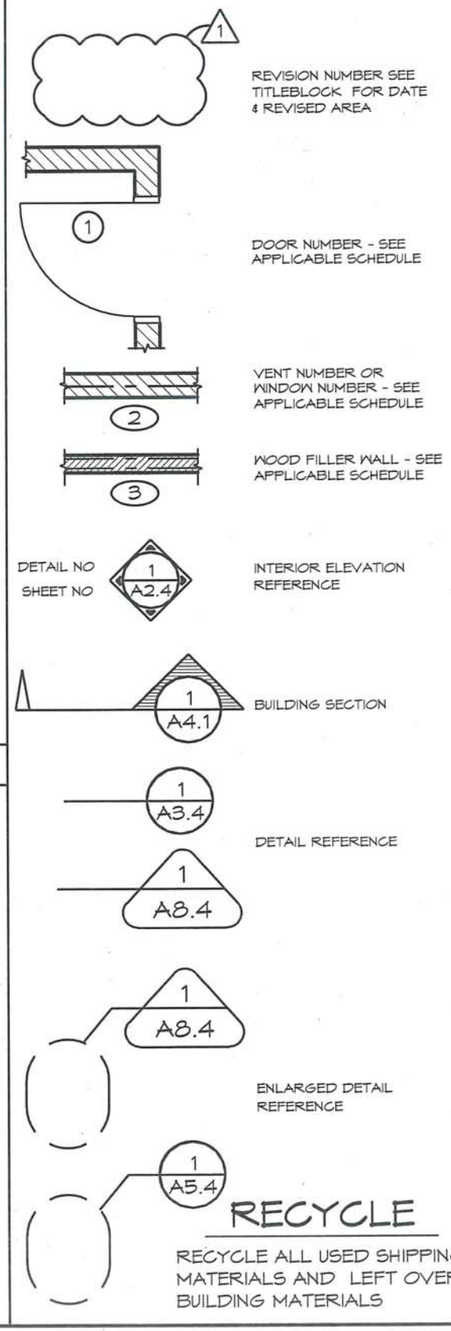

RECYCLE

RECYCLE ALL USED SHIPPING MATERIALS AND LEFT OVER BUILDING MATERIALS

SHEET SCHEDULE

SHEET	CONTENTS
G0	COVER SHEET
G1	GENERAL NOTES & SHEET SCHEDULE
G2	DESIGN CRITERIA AND CODE SUMMARY
A2.1	FLOOR PLAN
A2.2	ADA CLEARANCES & FIXTURE MOUNTING
A2.4	INTERIOR ELEVATIONS
A3.1	EXTERIOR ELEVATIONS
A3.2	EXTERIOR ELEVATIONS
A3.3	EXTERIOR SIDING DETAILS
A3.4	EXTERIOR SIDING DETAILS
A4.1	BUILDING SECTION
A5.1	FOUNDATION PLAN
A5.2	FOUNDATION DETAILS
A5.3	FOUNDATION DETAILS
A5.4	CMU WALL DETAILS
A5.9	VAULT INSTALLATION DETAILS
A6.1	DOOR SCHEDULE & DETAILS
A6.4	WINDOW SCHEDULE & DETAILS
A6.5	WOOD FILLER WALL SCHEDULE & DETAILS
A7.1	POST & BEAM ENTRY DETAIL
A8.1	ROOF PLAN
A8.2	ROOF FRAMING PLAN
A8.3	ROOF & ROOFING DETAILS
A8.3.1	ROOF & ROOFING DETAILS
A8.4	ROOFING DETAILS
E1	ELECTRICAL SCHEDULE
E2	ELECTRICAL PLAN
E3	ELECTRICAL RISER DETAILS
E4	ELECTRICAL PANEL SCHEDULE
B1-B10	BLOCK PLAN

REV.	DATE	BY	DESCRIPTION
2	03/03/2016	CR	G2,A2.1,A3.1,A3.2,A4.1,A5.1,A5.3
1	10/13/2015	TH	G1, G2, A2.1, A2.2, A2.4, A3.1 A4.1, A5.1, E2

Precision Structural Engineering, Inc.
www.structure1.com
Klamath Falls Office
250 Main Klamath Falls, Oregon 97603
Phone: (541) 850-6300 Fax: (541) 850-6233
info@structure1.com
ROMTEC216-7

ROMTEC
18240 NORTH BANK ROAD
ROSEBURG, OR 97470
(541)-496-3541 FAX (541)-496-0803

PROJECT: 1014 SST ASPEN STRETCH RESTROOM
POINT NO POINT LIGHTHOUSE RESTROOM
HANSVILLE, WASHINGTON

SHEET TITLE: GENERAL NOTES
SHEET SCHEDULE

PLAN SET# 18574
DATE: 04/13/2015
REVISIONS

REV.	DATE:	BY
1	10-13-2015	TH

DRAWN BY: CR

SHEET NO. G1

CODES AND STANDARDS

2012 INTERNATIONAL BUILDING CODE
2012 INTERNATIONAL MECHANICAL CODE
2012 UNIFORM PLUMBING CODE
2012 INTERNATIONAL FIRE CODE
2014 ELECTRICAL CODE
2012 WASHINGTON STATE ENERGY CODE
2009 ANSI 117.1 (ADA REQUIREMENTS)

ACI AMERICAN CONCRETE INSTITUTE, ACI 318, "BUILDING CODE REQUIREMENTS FOR STRUCTURAL CONCRETE"

ACI AMERICAN CONCRETE INSTITUTE, ACI 530, "BUILDING CODE REQUIREMENTS FOR MASONRY STRUCTURES"

AISC AMERICAN INSTITUTE OF STEEL CONSTRUCTION
"STEEL CONSTRUCTION MANUAL, 13TH EDITION"

CODE SUMMARY:

OCCUPANCY TYPE: U
CONSTRUCTION: VB
AREA: 196 SQ FT
AREA ALLOWABLE: 5,500 SQ FT
HEIGHT: 1 STORY
HEIGHT ALLOWABLE: 1 STORY
OCCUPANT LOAD: 3

DESIGN LOADS

ROOF: SNOW LOAD	25 PSF
ROOF: DEAD LOAD	10 PSF
WALL DEAD LOAD	81 PSF
IBC SEISMIC DESIGN CATEGORY	D
DESIGN WIND SPEED (ULTIMATE)	110 MPH, EXPOSURE D
ALLOWABLE SOIL BEARING	1500 PSF

SEISMIC DESIGN DATA:

RISK CATEGORY: II
IMPORTANCE FACTOR: 1.0
SS: 1.282
S1: 0.509
SITE CLASS: D
SMS: 1.282
SM1: 0.763
SDS: 0.855
SD1: 0.509
SEISMIC DESIGN CATEGORY: D
R = 5
BASE SHEAR: V = 0.171W

WIND DESIGN :

RISK CATEGORY: II
WIND SPEED = 110 MPH
EXPOSURE D
INTERNAL PRESSURE COEFE = ± 0.18

BEARING WALL SYSTEM: SPECIAL REINFORCED MASONRY SHEAR WALL

ANALYSIS METHOD: EQUIVALENT STATIC FORCE METHOD

SPECIAL INSPECTIONS

CONCRETE SPECIAL INSPECTION NOT REQUIRED PER IBC 1704.4
EXCEPTION 2.3 [FOOTINGS]
EXCEPTION 3 [SLAB]

SPECIAL INSPECTIONS, CONT'D

MASONRY CONSTRUCTION: LEVEL B QUALITY ASSURANCE (PER TABLE 1.19.2 IN TMS402/11)

INSPECTION TASK	FREQUENCY OF INSPECTION		REFERENCE CRITERIA		INSPECTION LOCATION	
	CONTINUOUS	PERIODIC	TMS 402 / ACI 530 / ASCE5	TMS 602 / ACI 530.1 / ASCE6	INHOUSE	FIELD
1. VERIFY COMPLIANCE WITH THE APPROVED SUBMITTALS	-	X	-	ART. 1.5	-	X
2. AS MASONRY CONSTRUCTION BEGINS, VERIFY THAT THE FOLLOWING ARE IN COMPLIANCE:						
A. PROPORTION OF SITE-PREPARED MORTAR	-	X	-	ART. 2.1, 2.6A	-	X
B. CONSTRUCTION OF MORTAR JOINTS	-	X	-	ART. 3.3 B	-	X
D. LOCATION OF REINFORCEMENT, CONNECTORS, AND PRESTRESSING TENDONS AND ANCHORAGES	-	X	-	ART. 3.4/ 3.6A	-	X
3. PRIOR TO GROUTING, VERIFY THAT THE FOLLOWING ARE IN COMPLIANCE:						
A. GROUT SPACE	-	X	-	ART. 3.2D, 3.2 F	-	X
B. GRADE, TYPE, AND SIZE OF REINFORCEMENT AND ANCHOR BOLTS, AND PRESTRESSING TENDONS AND ANCHORAGES	-	X	SEC. 1.16	ART. 2.4, 3.4	-	X
C. PLACEMENT OF REINFORCEMENT, CONNECTORS AND PRESTRESSING TENDONS AND ANCHORAGES	-	X	SEC. 1.16	ART. 3.2E, 3.4, 3.6A	-	X
D. PROPORTIONS OF SITE-PREPARED GROUT AND PRESTRESSING GROUT FOR BONDED TENDONS	-	X	-	ART. 2.6B, 2.4G.1.b	-	X
E. CONSTRUCTION OF MORTAR JOINTS	-	X	-	ART. 3.3B	-	X
4. VERIFY DURING CONSTRUCTION:						
A. SIZE AND LOCATION OF STRUCTURAL ELEMENTS	-	X		ART. 3.3F	-	X
B. TYPE, SIZE AND LOCATION OF ANCHORS, INCLUDING OTHER DETAILS OF ANCHORAGE OF MASONRY TO STRUCTURAL MEMBERS, FRAMES OR OTHER CONSTRUCTION.	-	X	SEC. 1.16.4.3, 1.17.1	-	-	X
D. PREPARATION, CONSTRUCTION, AND PROTECTION OF MASONRY DURING COLD WEATHER (TEMPERATURE BELOW 40°F(4.4°C)) OR HOT WEATHER (TEMPERATURE ABOVE 90°F(32.2°C))	-	X	-	ART. 1.8C, 1.8D	-	X
5. OBSERVE PREPARATION OF GROUT SPECIMENS, MORTAR SPECIMENS, AND/OR PRISMS	-	X	-	ART. 1.4B.2.a.3, 1.4B.2.b.3, 1.4B.2.c.3, 1.4B.3,1.4B.4	-	X

STEEL CONSTRUCTION (PER TABLE 1705.2.2 IN 2012 IBC)

VERIFICATION AND INSPECTION	FREQUENCY OF INSPECTION		REFERENCE CRITERIA		INSPECTION LOCATION	
	CONTINUOUS	PERIODIC	REFERENCED STANDARD	CBC REFERENCE	INHOUSE	FIELD
IDENTIFICATION MARKINGS TO CONFORM TO ASTM STANDARDS SPECIFIED IN THE APPROVED CONSTRUCTION DOCUMENTS	-	X	AISC 360 SECTION A3.3	-	X	-
MANUFACTURER'S CERTIFIED MILL TEST REPORTS	-	X	-	-	X	-

5-3-16
NABIL M. HATHA
STATE OF WASHINGTON
21133
REGISTERED
PROFESSIONAL ENGINEER
EXPIRES 7-17

Precision Structural Engineering, Inc.
www.structure1.com
Klamath Falls Office
250 Main Klamath Falls, Oregon 97603
Phone: (541) 850-6300 Fax: (541) 850-6233
info@structure1.com
ROMTEC216-7

ROMTEC
18240 NORTH BANK ROAD
ROSEBURG, OR 97470
(541)-496-3541 FAX (541)-496-0803

PROJECT: 1014 SST ASPEN STRETCH RESTROOM
POINT NO POINT LIGHTHOUSE RESTROOM
HANSVILLE, WASHINGTON

SHEET TITLE: DESIGN CRITERIA AND CODE SUMMARY

PLAN SET# 18574
DATE: 04/13/2015

REVISIONS

REV.	DATE:	BY
1	10-13-2015	TH
2	03-03-2016	CR

DRAWN BY: CR

SHEET NO. G2

NOTE:
FIXTURES AND ACCESSORIES ARE DIMENSIONED ON SHEETS A2.2 & A2.4

WALL TYPE SCHEDULE

8" REINFORCED CONCRETE MASONRY BLOCK WALL WITH MORTAR JOINTS, GROUTED SOLID ALL CELLS RUNNING BOND PATTERN.

6" REINFORCED CONCRETE MASONRY BLOCK WALL WITH MORTAR JOINTS, GROUTED SOLID ALL CELLS RUNNING BOND PATTERN.

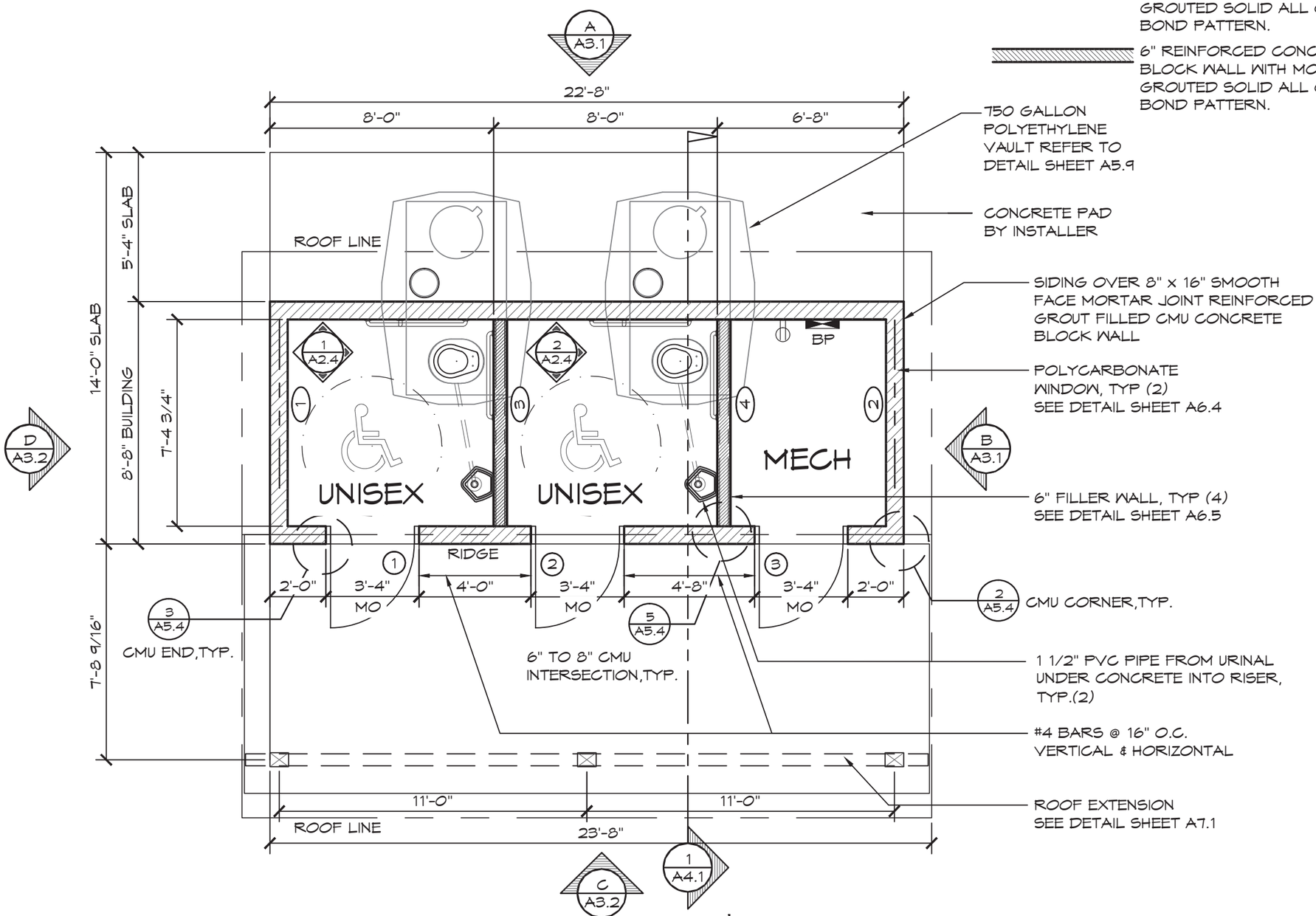

1 FLOOR PLAN

SCALE: 1/4" = 1'-0"

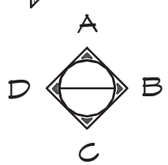

3/03/2016

CERTIFIED BATHROOM DESIGNER
CBD
Cassandra Ruport
CBD
ID #1063772
NKBA
Cassandra Ruport

EXPIRES: 12/31/2016

Precision Structural Engineering, Inc.
www.structure1.com
Klamath Falls Office
250 Main Klamath Falls, Oregon 97603
Phone: (541) 850-6300 Fax: (541) 850-6233
info@structure1.com
ROMTEC216-7

ROMTEC
18240 NORTH BANK ROAD
ROSEBURG, OR 97470
(541)-496-3541 FAX (541)-496-0803

PROJECT: 1014 SST ASPEN STRETCH RESTROOM
POINT NO POINT LIGHTHOUSE RESTROOM
HANSVILLE, WASHINGTON

SHEET TITLE: FLOOR PLAN

PLAN SET# 18574

DATE: 04/13/2015

REVISIONS

REV.	DATE:	BY
1	10-13-2015	TH
2	03-03-2016	CR

DRAWN BY: CR

SHEET NO. A2.1

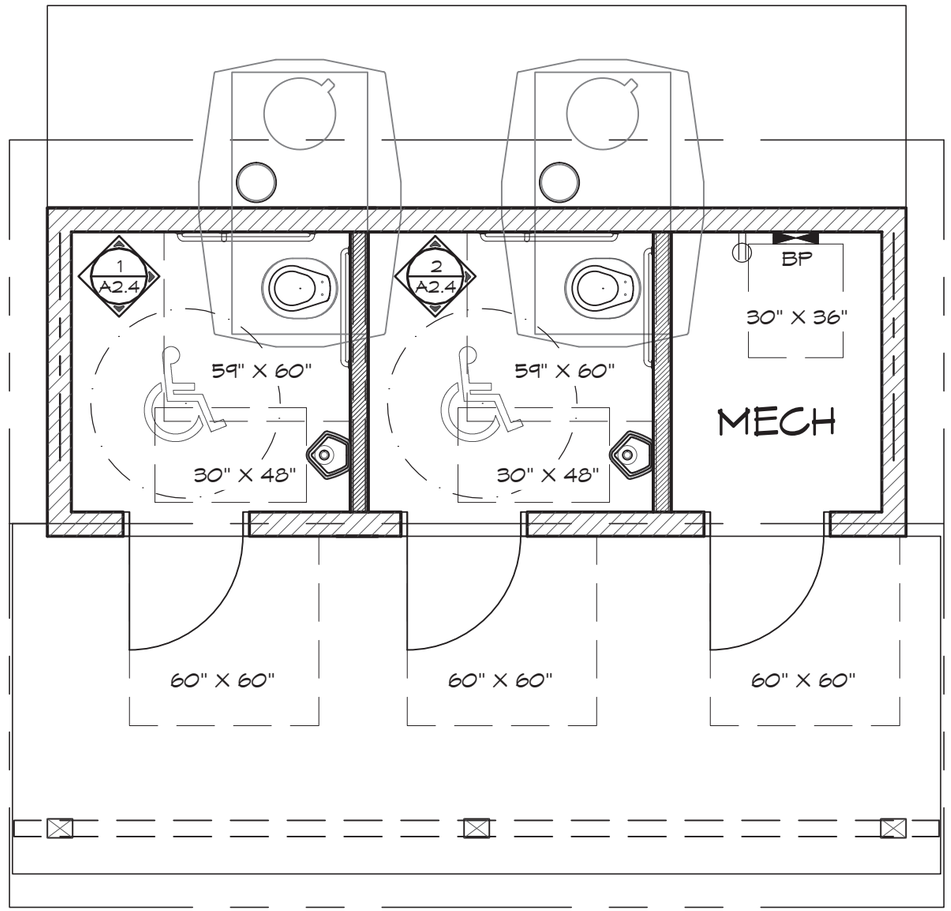

1 ADA RESTROOM FIXTURE CLEAR FLOOR AREA

SCALE: 1/4" = 1'-0"

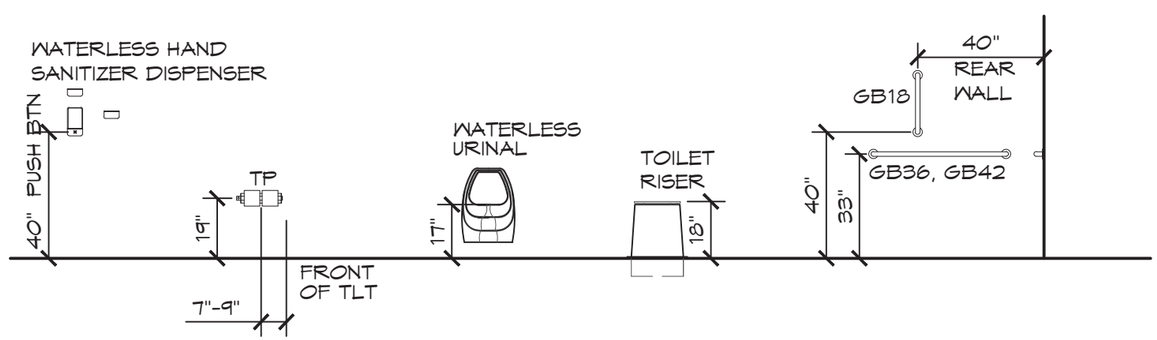

2 ADA RESTROOM FIXTURE MOUNTING HEIGHT SCHEDULE

SCALE: 1/4" = 1'-0"

3/03/2016

CERTIFIED BATHROOM DESIGNER
CBD
Cassandra Ruport
CBD
ID #1063772
NKBA
Cassandra Ruport

EXPIRES: 12/31/2016

Precision Structural Engineering, Inc.
www.structure1.com
Klamath Falls Office
250 Main Klamath Falls, Oregon 97603
Phone: (541) 850-6300 Fax: (541) 850-6233
info@structure1.com
ROMTEC216-7

ROMTEC
18240 NORTH BANK ROAD
ROSEBURG, OR 97470
(541)-496-3541 FAX (541)-496-0803

PROJECT: 1014 SST ASPEN STRETCH RESTROOM
POINT NO POINT LIGHTHOUSE RESTROOM
HANSVILLE, WASHINGTON
SHEET TITLE: FLOOR PLAN

PLAN SET# 18574

DATE: 04/13/2015

REVISIONS

REV.	DATE:	BY
1	10-13-2015	TH

DRAWN BY: CR

SHEET NO. A2.2

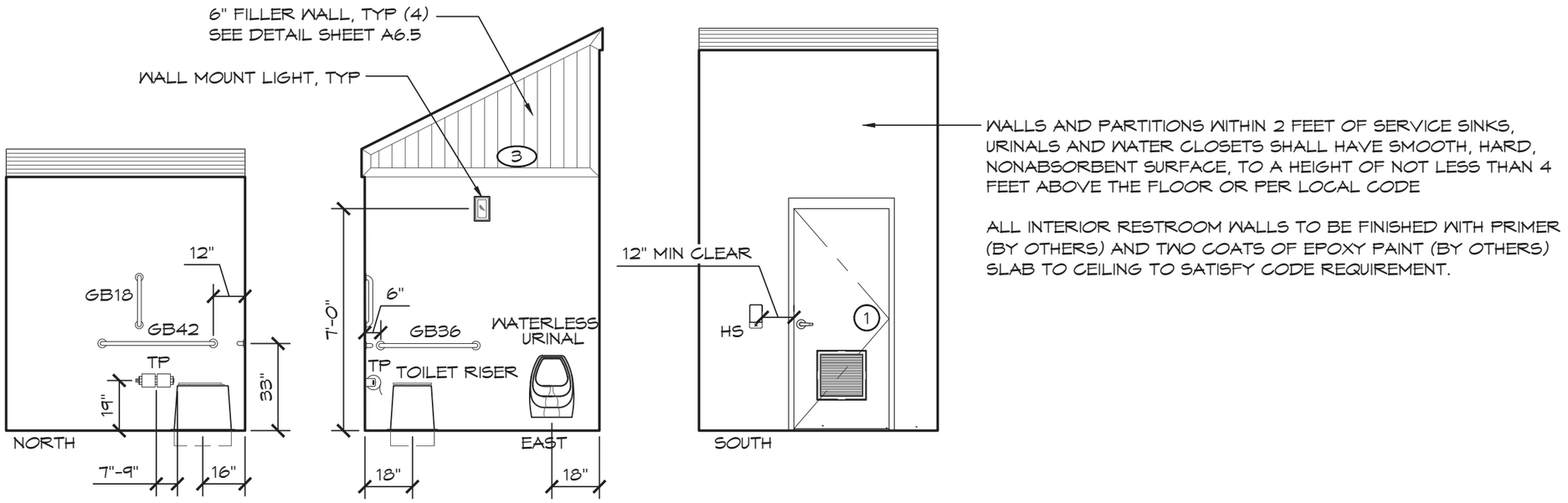

1 INTERIOR ELEVATIONS - UNISEX

SCALE: 1/4" = 1'-0"

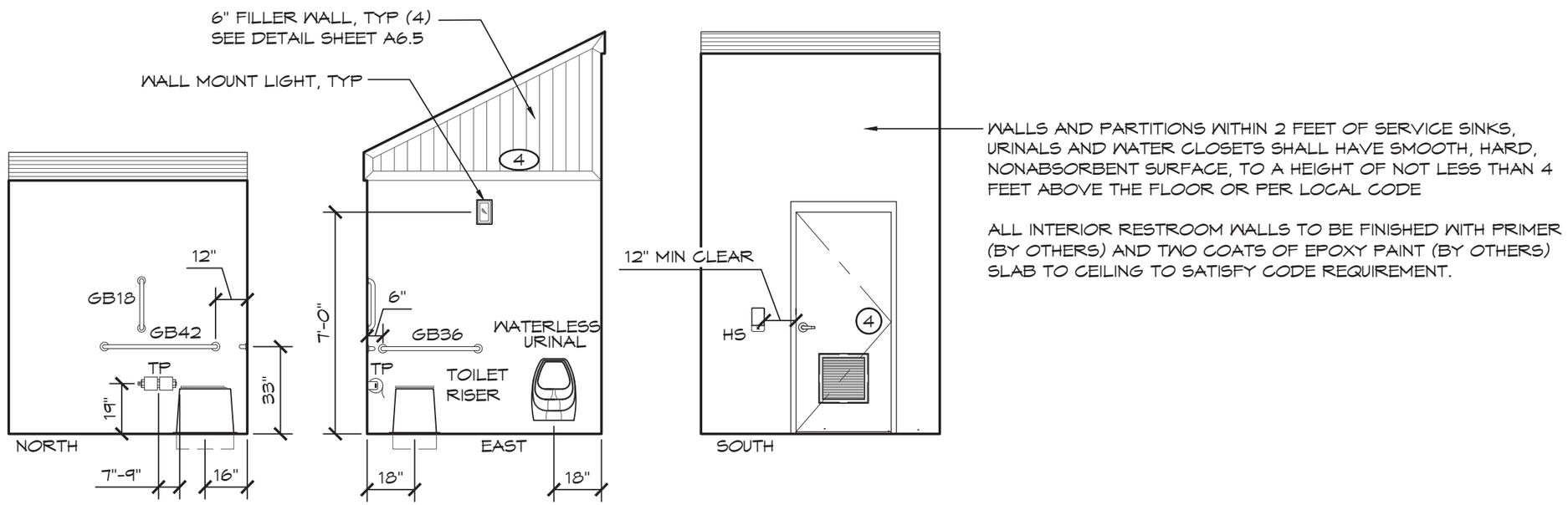

2 INTERIOR ELEVATIONS - UNISEX

SCALE: 1/4" = 1'-0"

3/03/2016
CERTIFIED BATHROOM DESIGNER
CBD
Cassandra Ruport
CBD
ID #1063772
NKBA
Cassandra Ruport
EXPIRES: 12/31/2016

Precision Structural Engineering, Inc.
www.structure1.com
Klamath Falls Office
250 Main Klamath Falls, Oregon 97603
Phone: (541) 850-6300 Fax: (541) 850-6233
info@structure1.com
ROMTEC210+7
ROMTEC
18240 NORTH BANK ROAD
ROSEBURG, OR 97470
(541)-496-3541 FAX (541)-496-0803

PROJECT: 1014 SST ASPEN STRETCH RESTROOM
POINT NO POINT LIGHTHOUSE RESTROOM
HANSVILLE, WASHINGTON
SHEET TITLE: INTERIOR ELEVATIONS

PLAN SET# 18574
DATE: 04/13/2015
REVISIONS

REV.	DATE:	BY
1	10-13-2015	TH

DRAWN BY: CR

SHEET NO. A2.4

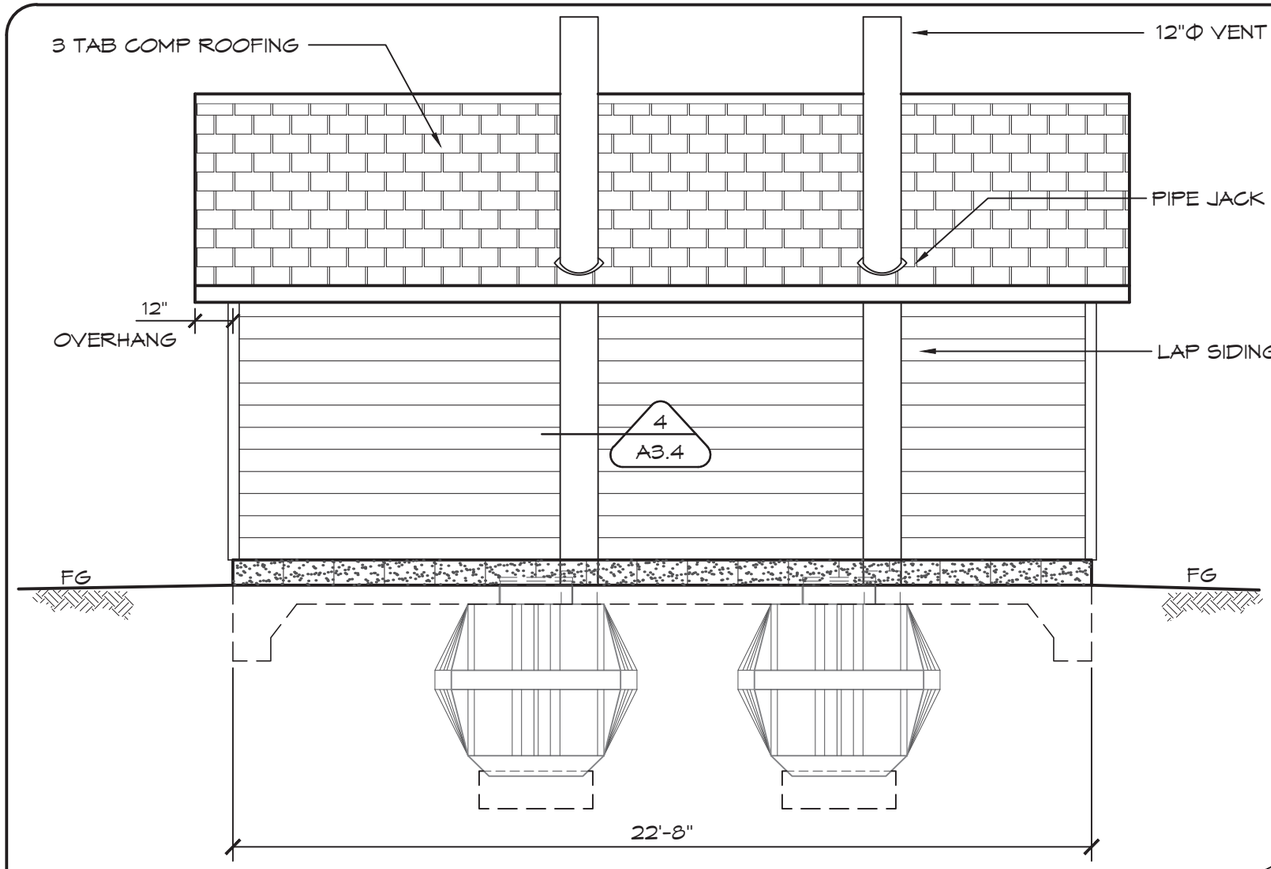

A ELEVATION VIEW

SCALE: 1/4" = 1'-0"

TRIM BOARD AND BATTEN EXTENSIONS MUST BE 3'-0" & LONGER AND 45° MITERED @ THE JOINT

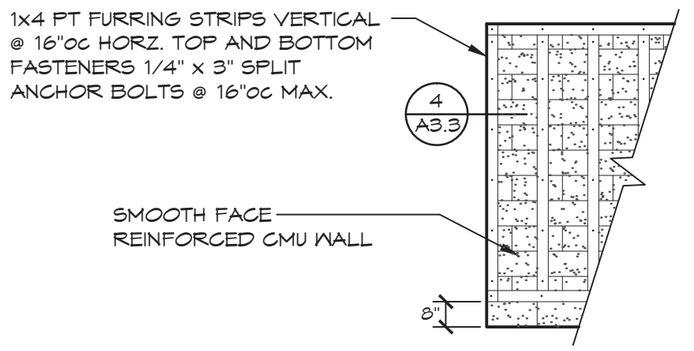

3 WALL DETAIL

SCALE: 1/4" = 1'-0"

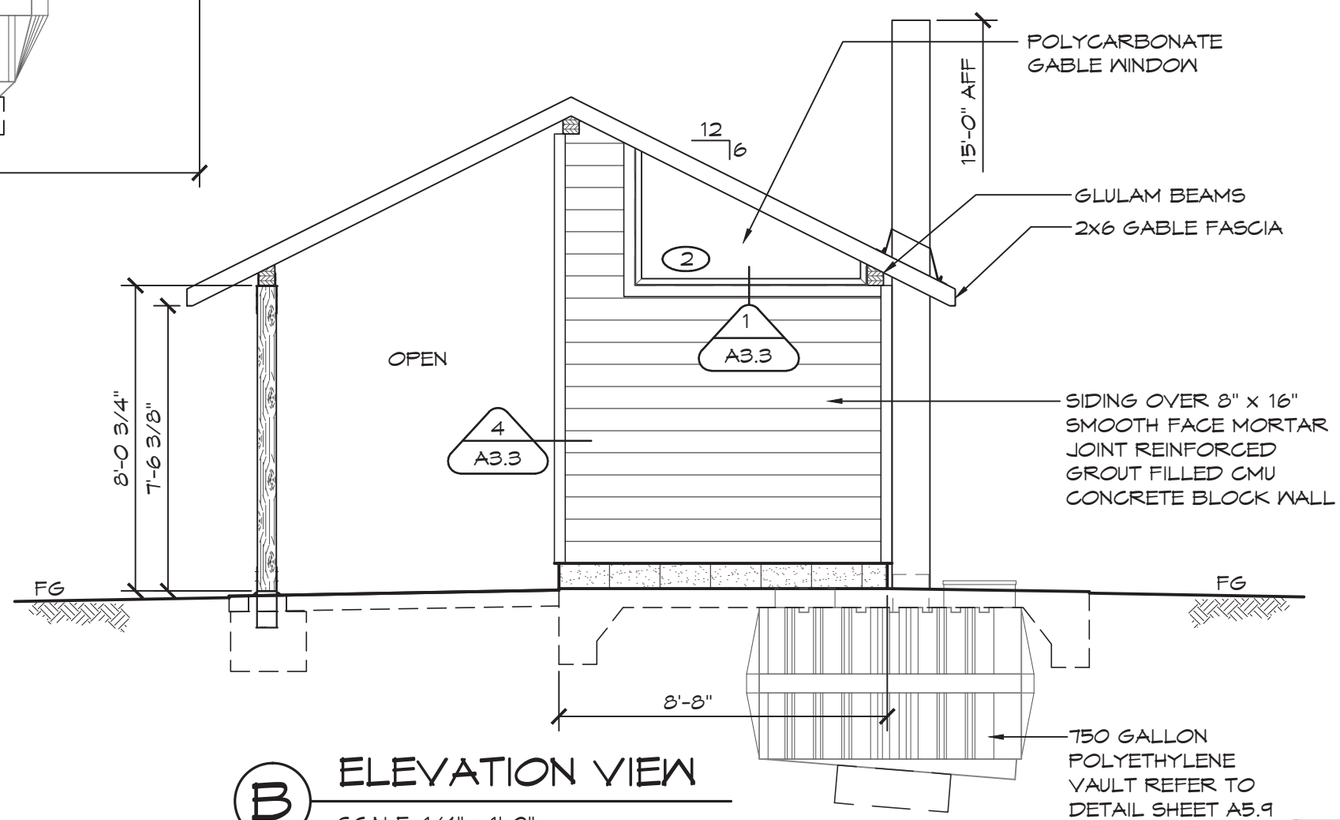

B ELEVATION VIEW

SCALE: 1/4" = 1'-0"

3/03/2016

CERTIFIED BATHROOM DESIGNER
CBD
Cassandra Ruport
CBD
ID #1063772
NKBA
Cassandra Ruport

EXPIRES: 12/31/2016

Precision Structural Engineering, Inc.
www.structure1.com
Klamath Falls Office
250 Main Klamath Falls, Oregon 97603
Phone: (541) 850-6300 Fax: (541) 850-6233
info@structure1.com
ROMTEC216-7

ROMTEC
18240 NORTH BANK ROAD
ROSEBURG, OR 97470
(541)-496-3541 FAX (541)-496-0803

PROJECT: 1014 SST ASPEN STRETCH RESTROOM
POINT NO POINT LIGHTHOUSE RESTROOM
HANSVILLE, WASHINGTON

SHEET TITLE: EXTERIOR ELEVATIONS

PLAN SET# 18574

DATE: 04/13/2015

REVISIONS

REV.	DATE:	BY
1	10-13-2015	TH
2	03-03-2016	CR

DRAWN BY: CR

SHEET NO. A3.1

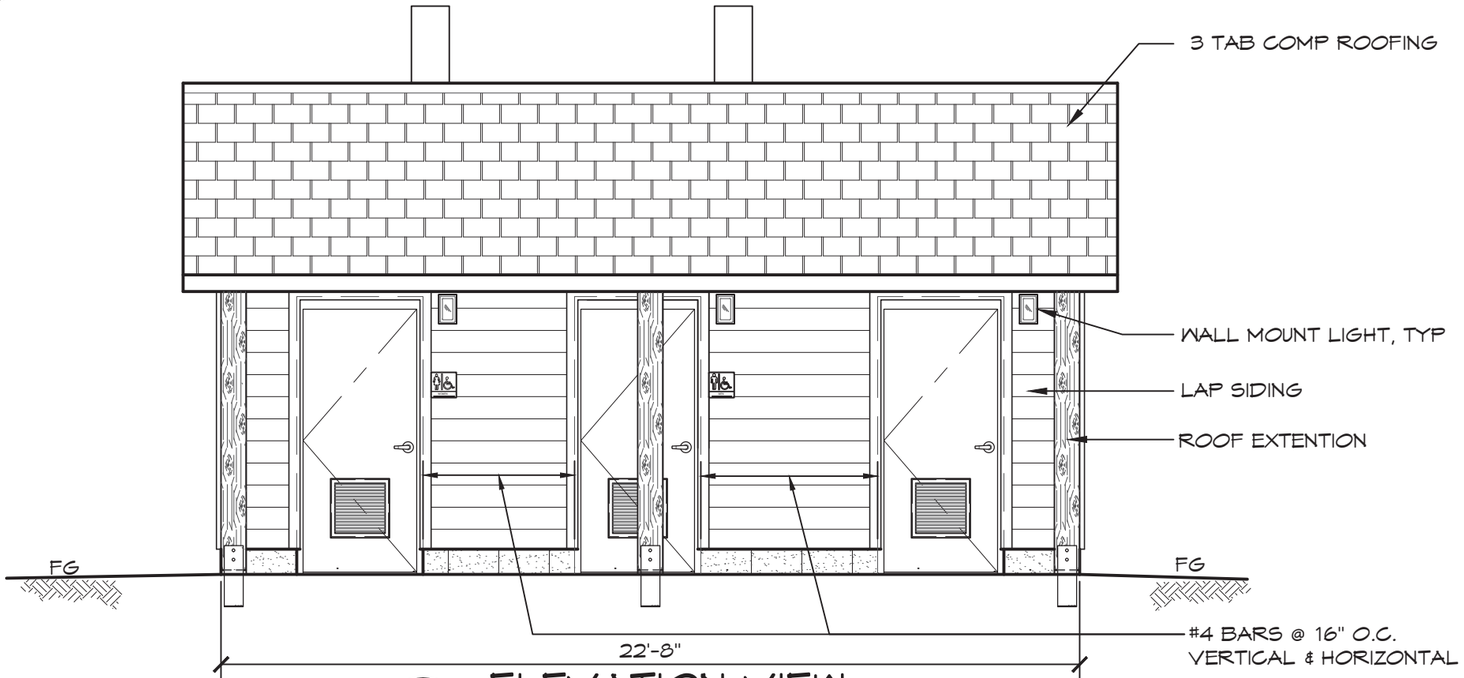

C ELEVATION VIEW

SCALE: 1/4" = 1'-0"

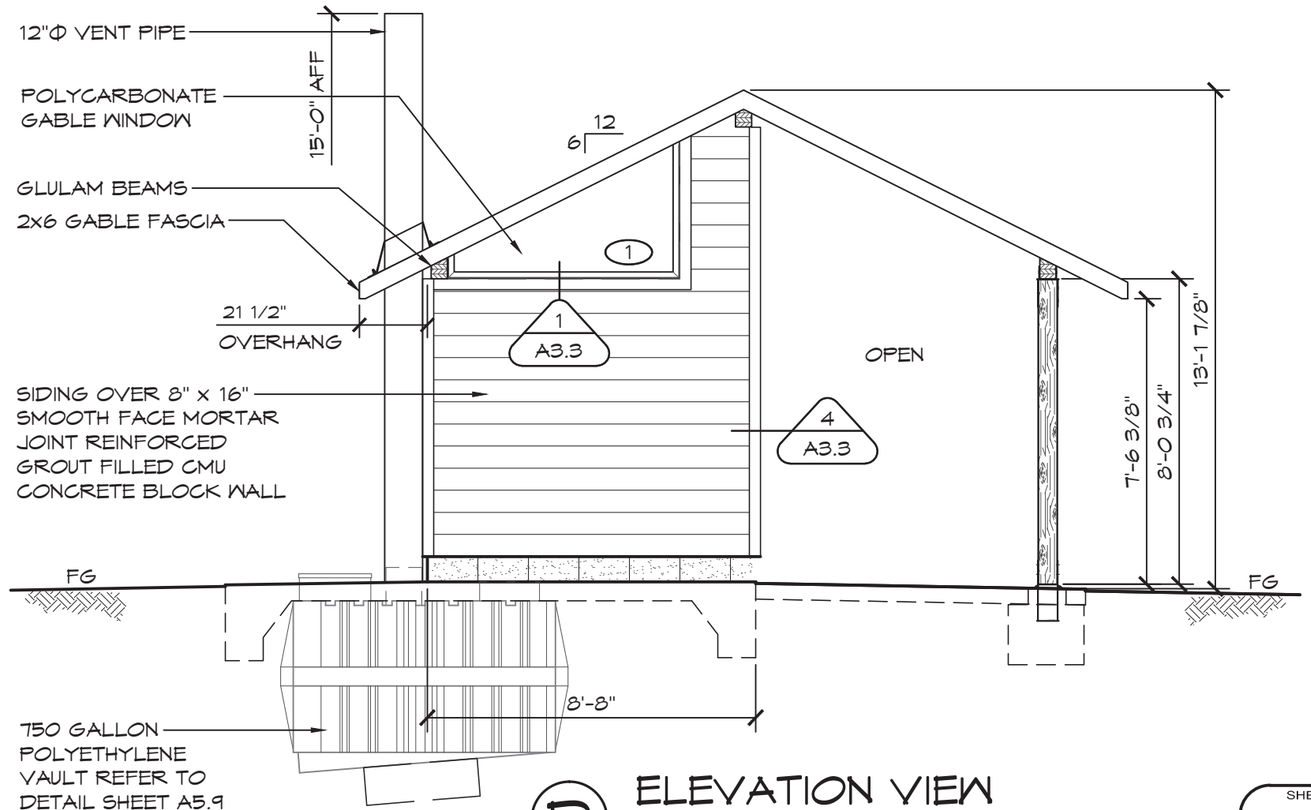

D ELEVATION VIEW

SCALE: 1/4" = 1'-0"

3/03/2016

CERTIFIED BATHROOM DESIGNER
CBD
Cassandra Ruport
CBD
ID #1063772
NKBA
Cassandra Ruport

EXPIRES: 12/31/2016

Precision Structural Engineering, Inc.
www.structure1.com
Klamath Falls Office
250 Main Klamath Falls, Oregon 97603
Phone: (541) 850-6300 Fax: (541) 850-6233
info@structure1.com

ROMTEC216-7

ROMTEC
18240 NORTH BANK ROAD
ROSEBURG, OR 97470
(541)-496-3541 FAX (541)-496-0803

PROJECT: 1014 SST ASPEN STRETCH RESTROOM
POINT NO POINT LIGHTHOUSE RESTROOM
HANSVILLE, WASHINGTON

SHEET TITLE: EXTERIOR ELEVATIONS

PLAN SET# 18574

DATE: 04/13/2015

REVISIONS

REV.	DATE:	BY
2	03-03-2016	CR

DRAWN BY: CR

SHEET NO. A3.2

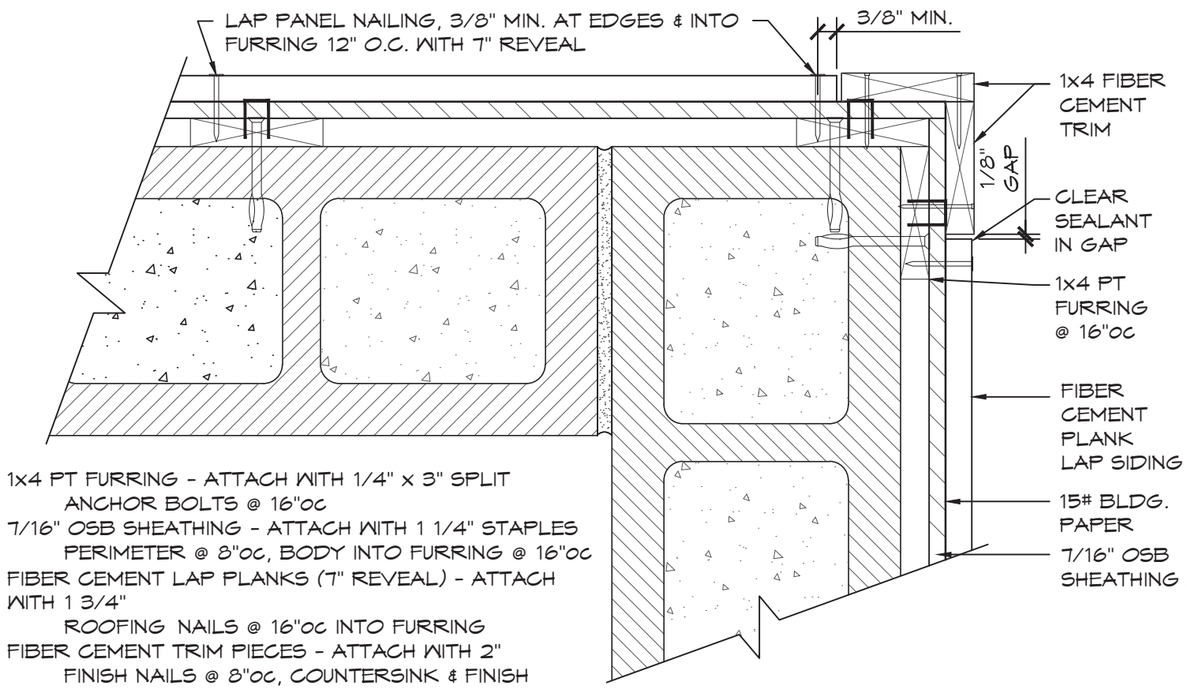

4 CMU CORNER TRIM DETAIL

SCALE: 3" = 1'-0"

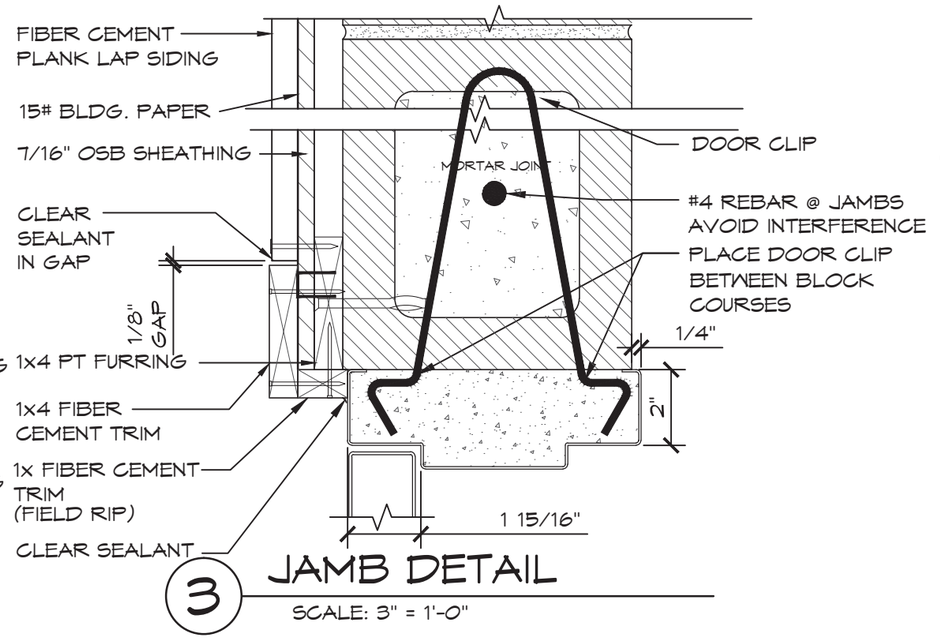

3 JAMB DETAIL

SCALE: 3" = 1'-0"

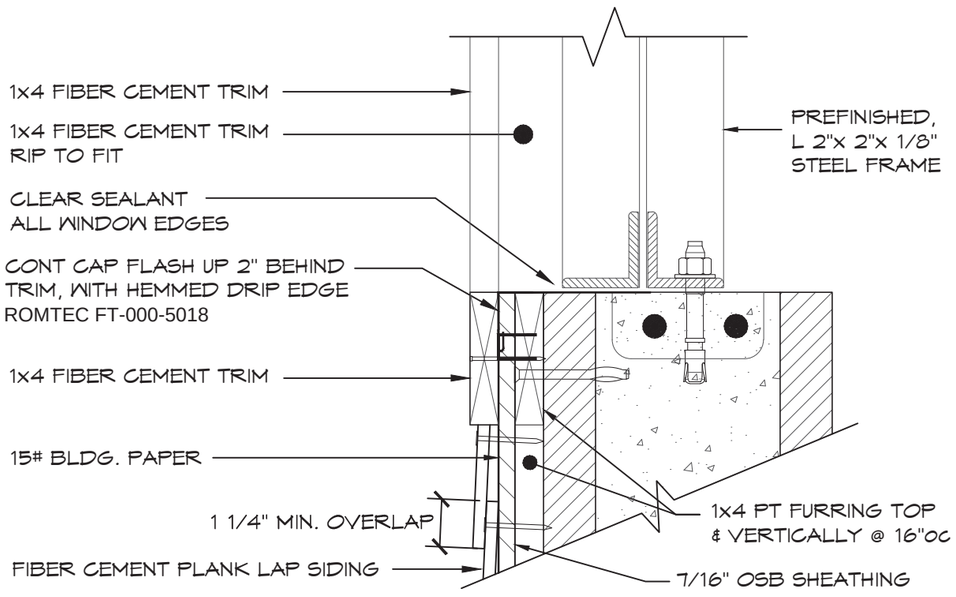

1 WINDOW TRIM SECTION

SCALE: 3" = 1'-0"

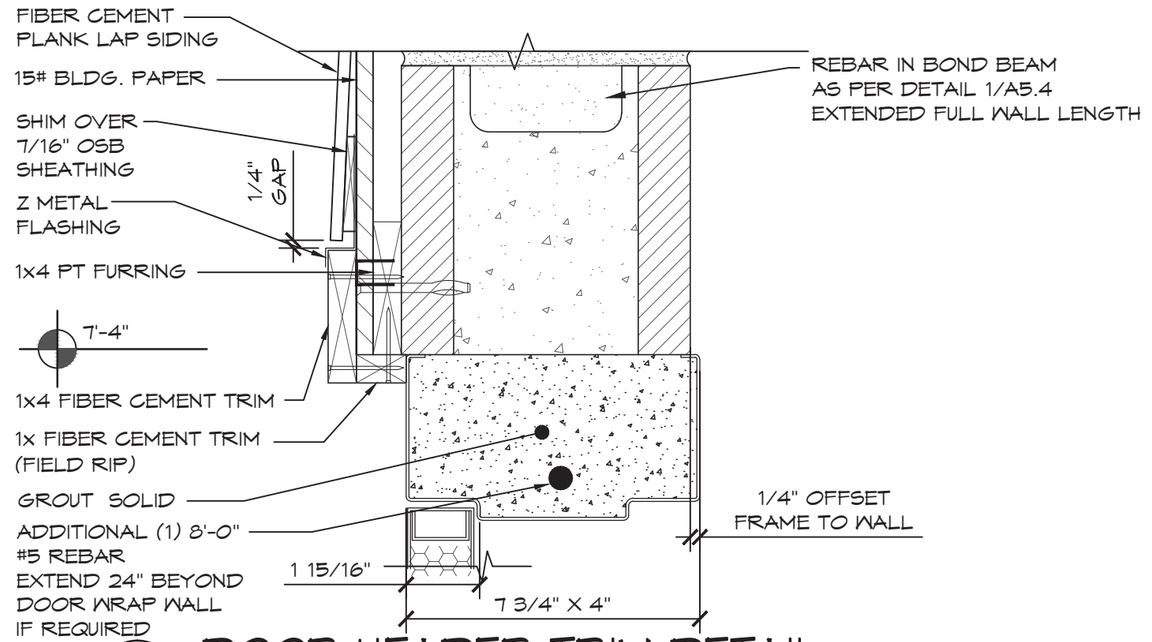

2 DOOR HEADER TRIM DETAIL

SCALE: 3" = 1'-0"

3/03/2016

CERTIFIED BATHROOM DESIGNER
CBD
Cassandra Ruport
CBD
ID #1063772
NKBA
Cassandra Ruport

EXPIRES: 12/31/2016

Precision Structural Engineering, Inc.
www.structure1.com
Klamath Falls, Oregon 97603
250 Main Klamath Falls, Oregon 97603
Phone: (541) 850-6300 Fax: (541) 850-6233
info@structure1.com
ROMTEC216-7

ROMTEC
18240 NORTH BANK ROAD
ROSEBURG, OR 97470
(541)-496-3541 FAX (541)-496-0803

PROJECT: 1014 SST ASPEN STRETCH RESTROOM
POINT NO POINT LIGHTHOUSE RESTROOM
HANSVILLE, WASHINGTON

SHEET TITLE: EXTERIOR SIDING DETAILS

PLAN SET# 18574
DATE: 04/13/2015
REVISIONS

REV.	DATE:	BY

DRAWN BY: CR

SHEET NO. A3.3

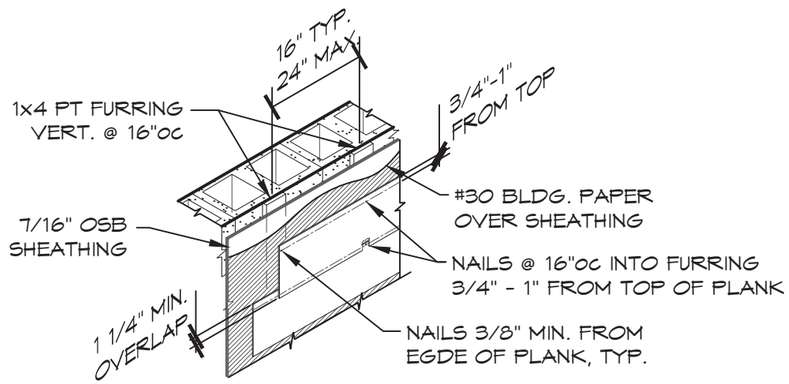

SIDING MANUFACTURE DOES NOT RECOMMEND CAULKING AT FIELD BUTT JOINTS.
INSTALL FACTORY EDGES TOGETHER AT BUTT JOINTS.

1 FIBER CEMENT LAP DETAILS

SCALE: 1/2" = 1'-0"

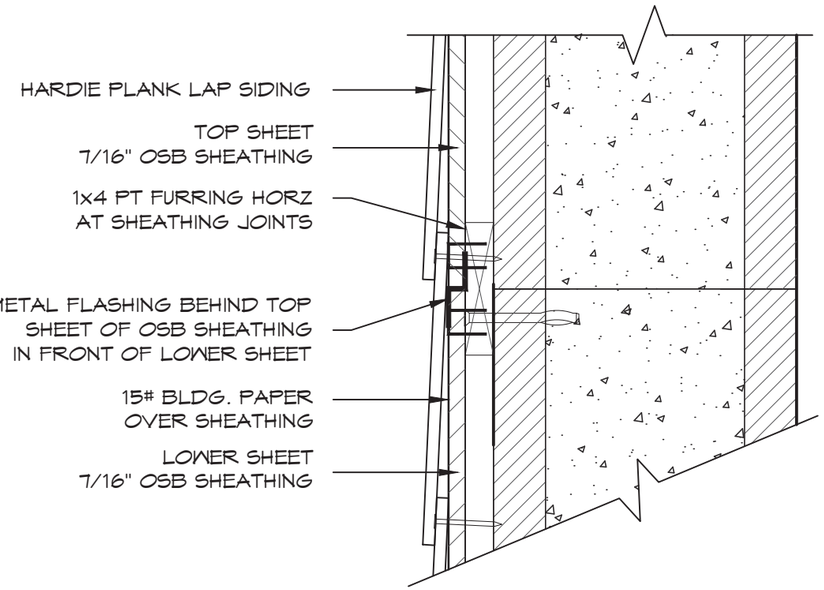

3 SHEATHING INTERFACE DETAIL

SCALE: 3" = 1'-0"

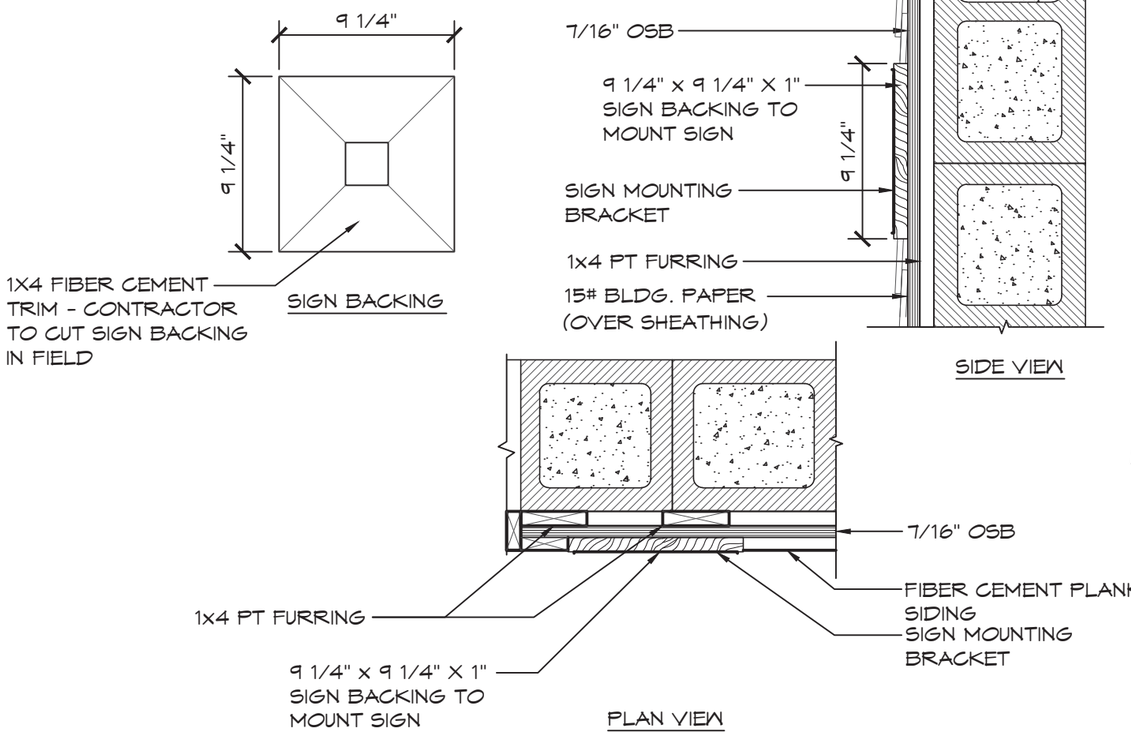

2 SIGN MOUNTING DETAIL

SCALE: 1 1/2" = 1'-0"

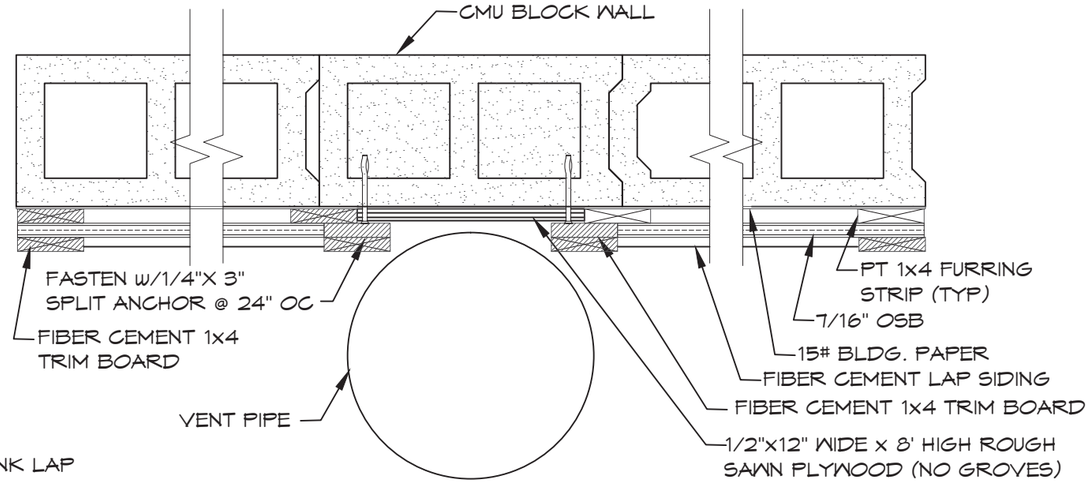

PLAN VIEW

4 WALL BEHIND VENT DETAIL

SCALE: 1 1/2" = 1'-0"

3/03/2016

CERTIFIED BATHROOM DESIGNER
CBD
Cassandra Ruport
CBD
ID #1063772
NKBA
Cassandra Ruport

EXPIRES: 12/31/2016

Precision Structural Engineering, Inc.
www.structure1.com
Klamath Falls Office
250 Main Klamath Falls, Oregon 97603
Phone: (541) 850-6300 Fax: (541) 850-6233
info@structure1.com
ROMTEC215-7

ROMTEC
18240 NORTH BANK ROAD
ROSEBURG, OR 97470
(541)-496-3541 FAX (541)-496-0803

PROJECT: 1014 SST ASPEN STRETCH RESTROOM
POINT NO POINT LIGHTHOUSE RESTROOM
HANSVILLE, WASHINGTON

SHEET TITLE: EXTERIOR SIDING DETAILS

PLAN SET# 18574

DATE: 04/13/2015

REVISIONS

REV.	DATE:	BY

DRAWN BY: CR

SHEET NO. A3.4

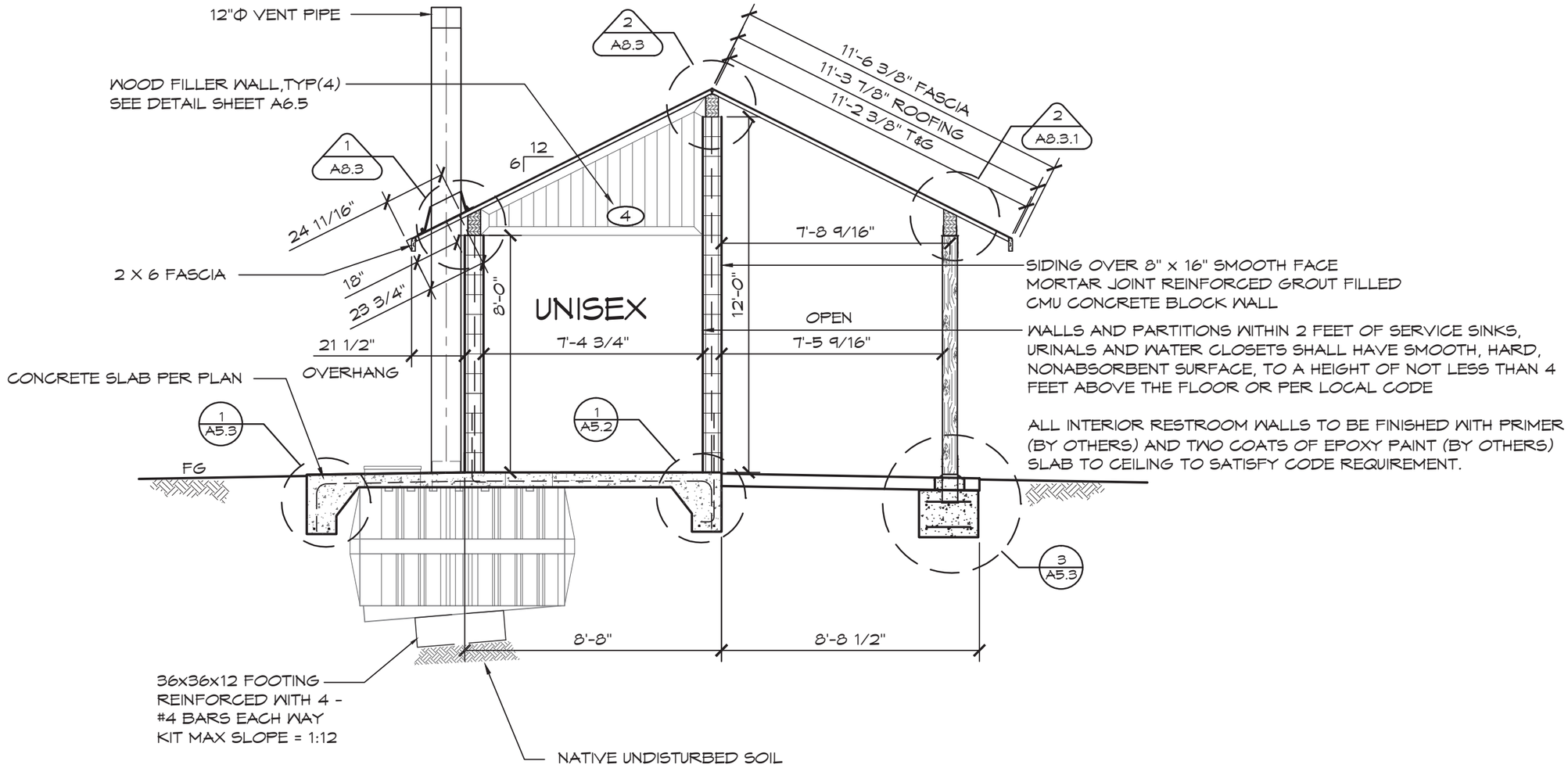

1 BUILDING SECTION

SCALE: 1/4" = 1'-0"

3/03/2016

CERTIFIED BATHROOM DESIGNER
CBD
Cassandra Ruport
CBD
ID #1063772
NKBA
Cassandra Ruport

EXPIRES: 12/31/2016

Precision Structural Engineering, Inc.
www.structure1.com
Klamath Falls Office
250 Main Klamath Falls, Oregon 97603
Phone: (541) 850-6300 Fax: (541) 850-6233
info@structure1.com
ROMTEC216-7

ROMTEC
16240 NORTH BANK ROAD
ROSEBURG, OR 97470
(541)-496-3541 FAX (541)-496-0803

PROJECT: 1014 SST ASPEN STRETCH RESTROOM
POINT NO POINT LIGHTHOUSE RESTROOM
HANSVILLE, WASHINGTON

SHEET TITLE: BUILDING SECTIONS

PLAN SET# 18574

DATE: 04/13/2015

REVISIONS

REV.	DATE:	BY
1	10-13-2015	TH
2	03-03-2016	CR

DRAWN BY: CR

SHEET NO. A4.1

FINISH SLAB WITH A WATER BASED CONCRETE SEALER (PROVIDED BY OTHERS)

RECYCLE

RECYCLE ALL USED SHIPPING MATERIALS AND LEFT OVER BUILDING MATERIALS

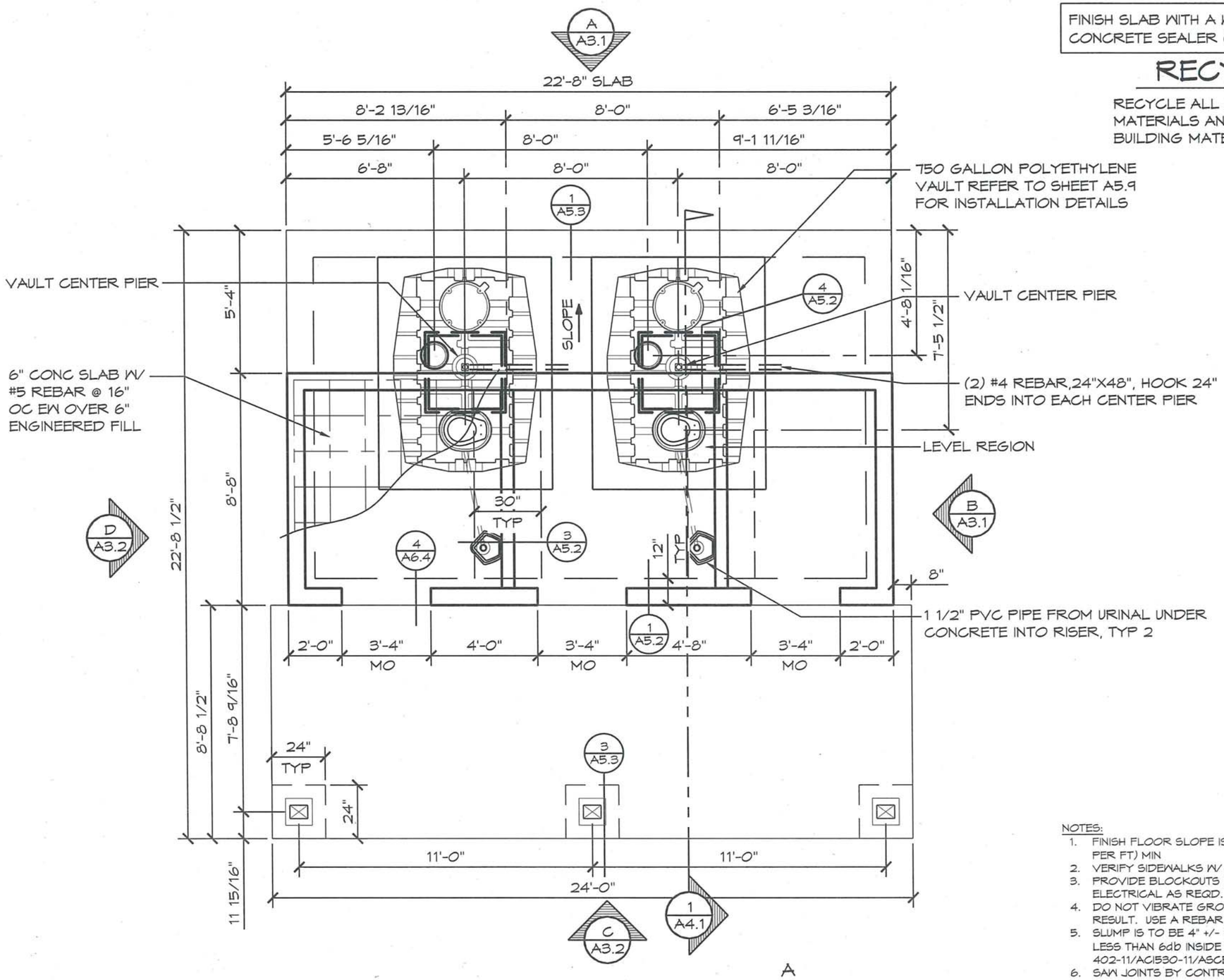

1 FOUNDATION PLAN

SCALE: 1/4" = 1'-0"

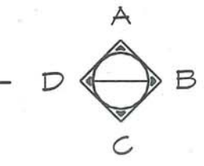

NOTES:

1. FINISH FLOOR SLOPE IS 2% (1/4" PER FT) MAX & 1% (1/8" PER FT) MIN
2. VERIFY SIDEWALKS W/ OWNER
3. PROVIDE BLOCKOUTS FOR PLUMBING, MECHANICAL, & ELECTRICAL AS REQD. CO-ORDINATE W/ SUBS.
4. DO NOT VIBRATE GROUT, AS DAMAGE TO THE CMU MAY RESULT. USE A REBAR TO ROD THE GROUT.
5. SLUMP IS TO BE 4" +/- 1" REBAR MIN. BEND SHALL BE NOT LESS THAN 6db INSIDE DIA. AS PER TMS 402-11/ACI530-11/ASCE5-11 TABLE 1.16.6
6. SAW JOINTS BY CONTRACTOR. SLAB APPEARANCE IS A PRIORITY. LOCATE JOINTS AT 10' O.C. MAX.
7. MAXIMUM SLOPE OF EXCAVATION MAY BE LIMITED BY LOCAL SOIL CONDITIONS. INCREASE DEPTH OF FORMED CONCRETE AS REQD.
8. CONCRETE SLAB BENEATH FLOOR MOUNTED FIXTURES IS TO BE GROUTED LEVEL AND SMOOTH.
9. UNDER FOOTINGS: UNDISTURBED NATIVE SOIL OR 12" FILL COMPACTED TO 90% ASTM D 1557 TO MEET OR EXCEED ALLOWABLE BEAR PRESSURE ON SHEET G2.

NABIL M. TAHA
STATE OF WASHINGTON
41133
REGISTERED
PROFESSIONAL ENGINEER
EXPIRES 7-17

Precision Structural Engineering, Inc.
Klamath Falls, Oregon
www.structure1.com
250 Main Klamath Falls, Oregon 97603
Phone: (541) 850-6300 Fax: (541) 850-6233
info@structure1.com
ROMTEC216-7

ROMTEC
18240 NORTH BANK ROAD
ROSEBURG, OR 97470
(541)-496-3541 FAX (541)-496-0803

PROJECT: 1014 SST ASPEN STRETCH RESTROOM
POINT NO POINT LIGHTHOUSE RESTROOM
HANSVILLE, WASHINGTON

SHEET TITLE: FOUNDATION PLAN

PLAN SET# 18574

DATE: 04/13/2015

REVISIONS

REV.	DATE:	BY
1	10-13-2015	TH
2	03-03-2016	CR

DRAWN BY: CR

SHEET NO. A5.1

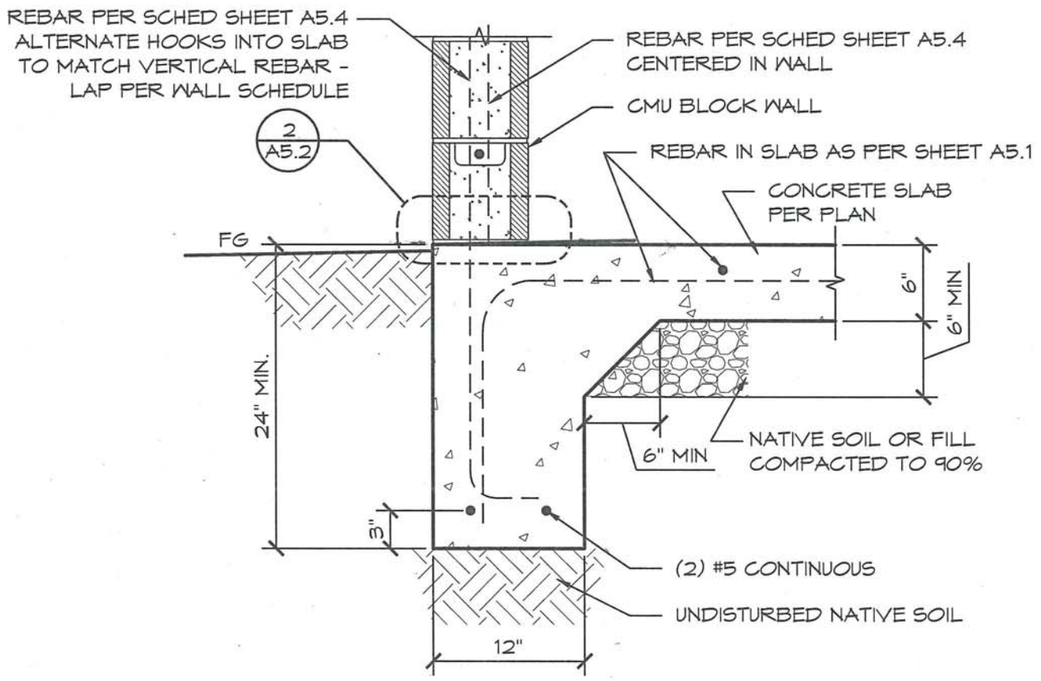

1 FOUNDATION & THICKENED SLAB DETAIL

SCALE: 1" = 1'-0"

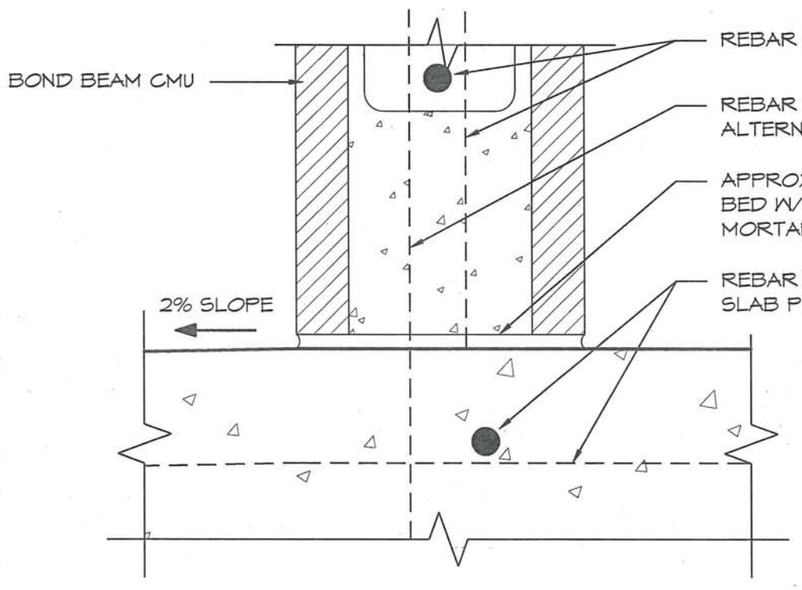

2 WALL-SLAB CONNECTION

SCALE: 3" = 1'-0"

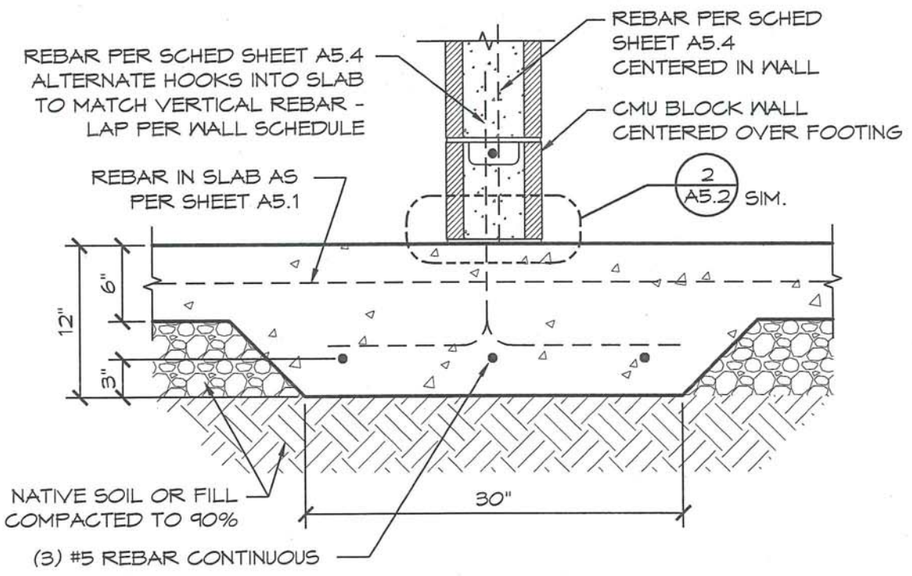

3 THICKENED SLAB AT WALLS

SCALE: 1" = 1'-0"

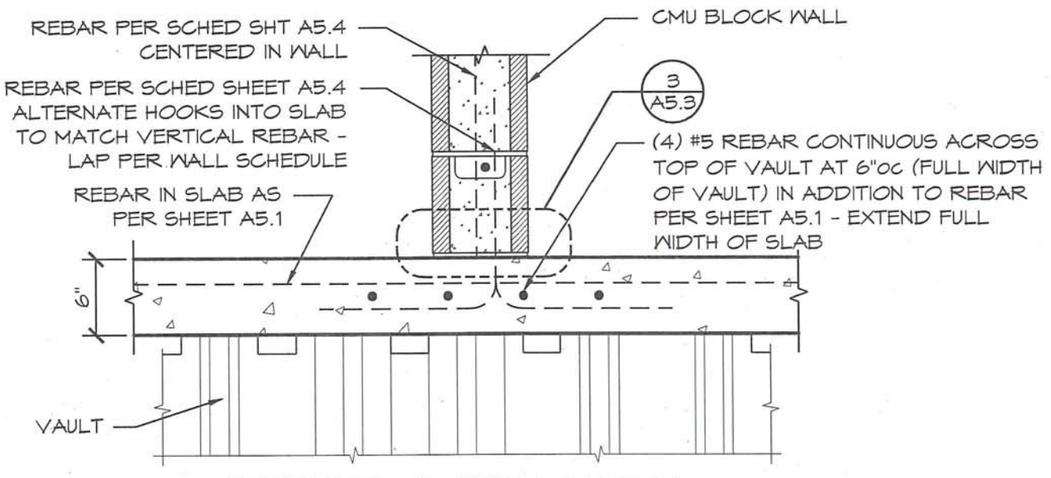

4 REBAR OVER VAULT

SCALE: 1" = 1'-0"

3-3-16

NABIL M. ROMTEC
STATE OF WASHINGTON
41133
REGISTERED
PROFESSIONAL ENGINEER

EXPIRES 7-17

Precision Structural Engineering, Inc.
www.structure1.com
Klamath Falls Office
250 Main Klamath Falls, Oregon 97603
Phone: (541) 850-0330 Fax: (541) 850-0233
ROMTEC2167 info@structure1.com

ROMTEC
18240 NORTH BANK ROAD
ROSEBURG, OR 97470
(541)-496-3541 FAX (541)-496-0803

PROJECT: 1014 SST ASPEN STRETCH RESTROOM
POINT NO POINT LIGHTHOUSE RESTROOM
HANSVILLE, WASHINGTON

SHEET TITLE: FOUNDATION DETAILS

PLAN SET# 18574

DATE: 04/13/2015

REVISIONS

REV.	DATE:	BY

DRAWN BY: CR

SHEET NO. A5.2

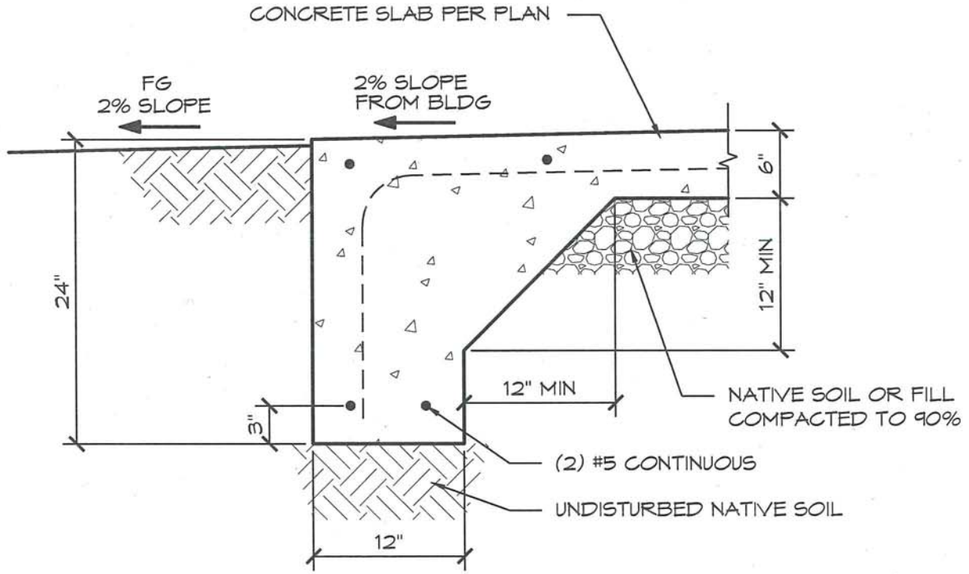

1 FOUNDATION DETAIL

SCALE: 1" = 1'-0"

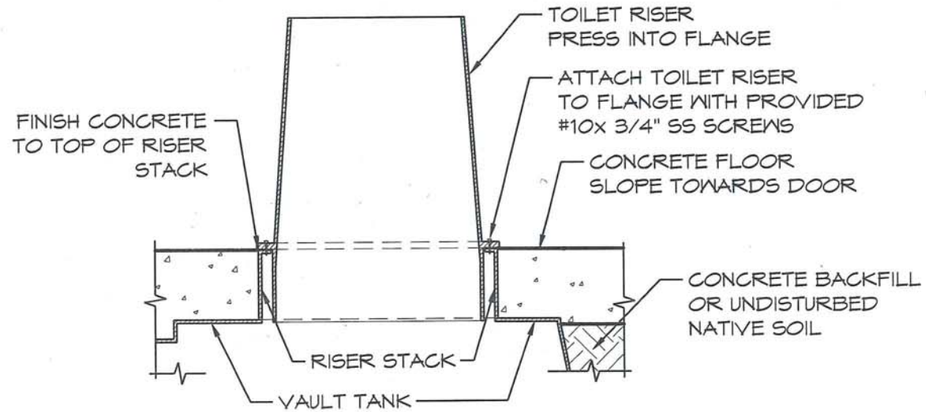

2 RISER/CONCRETE DETAIL

SCALE: 1" = 1'-0"

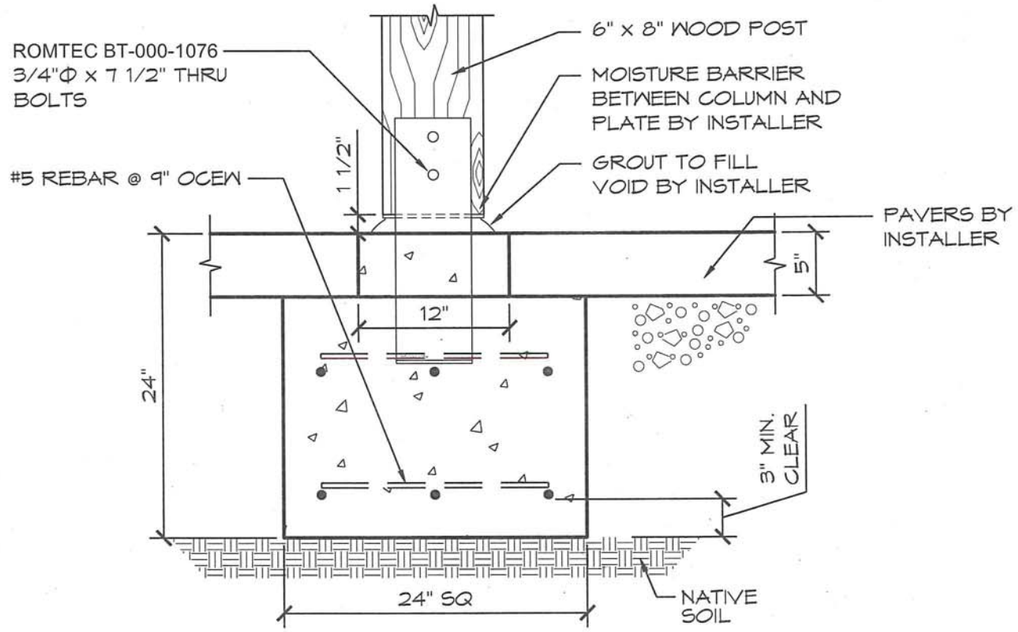

3 POST FOOTING DETAIL

SCALE: 1" = 1'-0"

Precision Structural Engineering, Inc.
www.structure1.com
Klamath Falls Office
250 Main Klamath Falls, Oregon 97603
Phone: (541) 850-6300 Fax: (541) 850-6233
info@structure1.com
ROMTEC216-7

ROMTEC
1824O NORTH BANK ROAD
ROSEBURG, OR 97470
(541)-496-3541 FAX (541)-496-0803

PROJECT: 1014 SST ASPEN STRETCH RESTROOM
POINT NO POINT LIGHTHOUSE RESTROOM
HANSVILLE, WASHINGTON

SHEET TITLE: FOUNDATION DETAILS

PLAN SET# 18574

DATE: 04/13/2015

REVISIONS

REV.	DATE:	BY
2	03-03-2016	CR

DRAWN BY: CR

SHEET NO. A5.3

3-3-16

NABIL M. [illegible]
STATE OF WASHINGTON
41133
REGISTERED
PROFESSIONAL ENGINEER
EXPIRES 7-17

CMU REBAR SCHEDULE		
REBAR	MIN. LAP	BEND RAD.
#4	24"	3" MIN.
#5	30"	3-3/4" MIN.

CMU REBAR NOTES:
- BENDS: MIN. INSIDE BEND RADIUS SHALL BE NOT LESS THAN 6d AS PER ACI 530-08 SECTION 1.15.6
- SPLICES: LAP SPLICES ARE PERMITTED AS PER ACI 530-08 SECTION 2.1.9.7

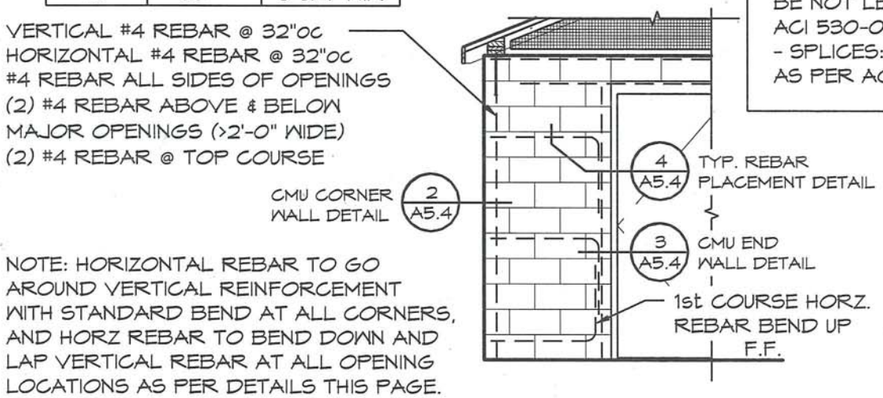

NOTE: HORIZONTAL REBAR TO GO AROUND VERTICAL REINFORCEMENT WITH STANDARD BEND AT ALL CORNERS, AND HORZ REBAR TO BEND DOWN AND LAP VERTICAL REBAR AT ALL OPENING LOCATIONS AS PER DETAILS THIS PAGE.

1 CMU REBAR LAYOUT DETAIL

SCALE: 1/4" = 1'-0"

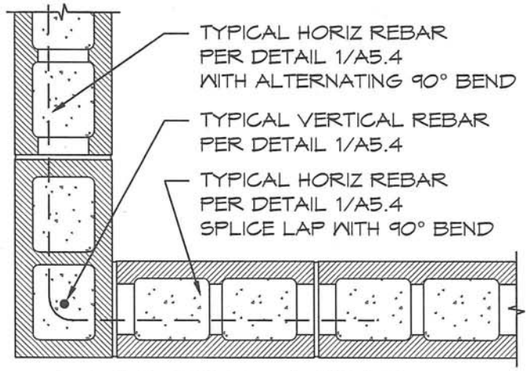

2 MORTAR JOINT CMU CORNER DETAIL

SCALE: 1" = 1'-0"

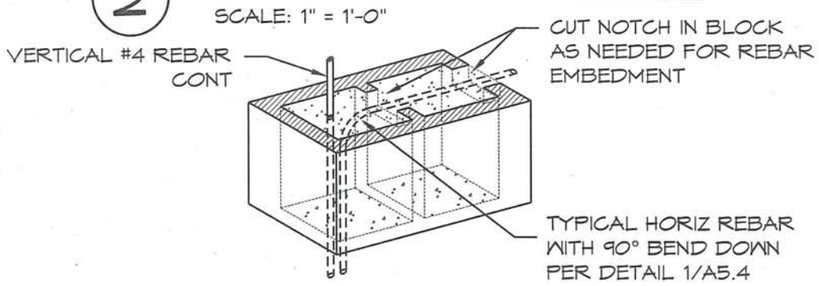

3 MORTAR JOINT CMU WALL END DETAIL

SCALE: 1" = 1'-0"

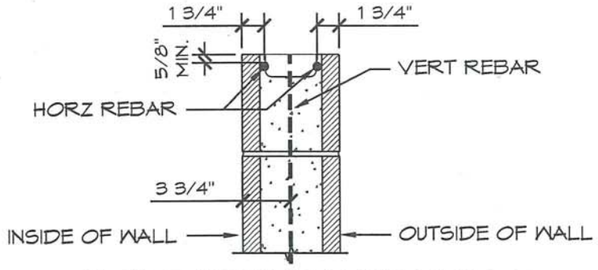

NOTE: REBAR INSTALLED AS PER ACI 530-08

4 REBAR PLACEMENT

SCALE: 1" = 1'-0"

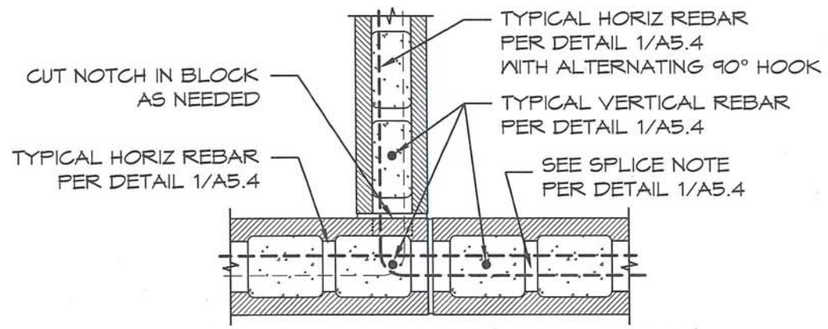

5 6" TO 8" MORTAR JOINT CMU INTERSECTION DETAIL

SCALE: 1" = 1'-0"

NABIL M. HAMHA — STATE OF WASHINGTON — 41133 — REGISTERED PROFESSIONAL ENGINEER
EXPIRES 7-17

Precision Structural Engineering, Inc.
www.structure1.com
Klamath Falls Office
250 Main Klamath Falls, Oregon 97603
Phone: (541) 850-8300 Fax: (541) 850-8233
info@structure1.com
ROMTEC2167

ROMTEC
18240 NORTH BANK ROAD
ROSEBURG, OR 97470
(541)-496-3541 FAX (541)-496-0803

PROJECT: 1014 SST ASPEN STRETCH RESTROOM
POINT NO POINT LIGHTHOUSE RESTROOM
HANSVILLE, WASHINGTON

SHEET TITLE: STRUCTURAL DETAILS

PLAN SET# 18574

DATE: 04/13/2015

REVISIONS

REV.	DATE:	BY

DRAWN BY: CR

SHEET NO. A5.4

VAULT INSTALLATION NOTES:

1) VAULT MUST BE INSPECTED FOR DAMAGE DURING SHIPPING BEFORE INSTALLATION.
2) VAULT HOLE MUST NOT BE OVERSIZED.
3) DO NOT DIG VAULT HOLE DEEPER THAN SHOWN. (ANY UN-COMPACTED FILL AT BOTTOM OF VAULT CAN COMPACT AND CAUSE DAMAGE TO VAULT)
4) DO NOT BUILD UP SOIL AROUND TOP OF VAULT TO MEET HEIGHT OF VAULT. IF THAT IS THE CASE THE DIFFERENCE MUST BE MADE UP WITH MAKING THE CONCRETE SLAB THICKER.
5) IF OVERSIZE HOLE REQUIRED FOR REMOVAL OF BOULDERS OR OTHER MATERIAL, HOLE MUST BE FILLED WITH CONCRETE.
6) BACKFILL W/ CONCRETE AROUND VAULT AREA IN 12" INCREMENTS AND CHECK TOILET RISER LEVEL AS BACKFILLING.

NOTE:
2500 PSI CONCRETE BACKFILL. CAST-IN-PLACE CONCRETE MAY BE USED AS BACKFILL AROUND VAULT, SEE GENERAL NOTES ON SHEET G1.

REQUIREMENT:
FILL VAULT WITH WATER BEFORE POURING CONCRETE BACKFILL

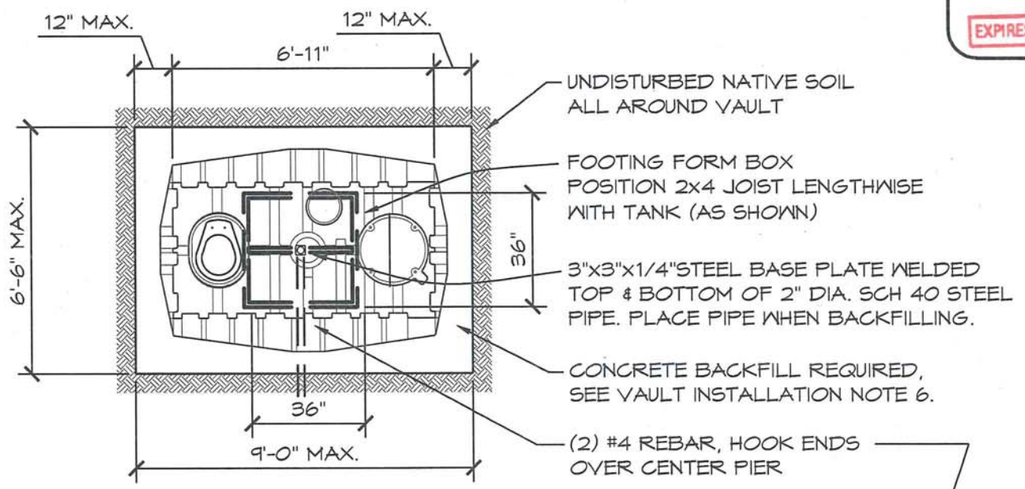

ASSEMBLE FOOTING KIT AS SHOWN

- 8 PIECES OF PRECUT REBAR LAID IN CRISS CROSS PATTERN ON ROCKS IN MIDDLE OF FORM BOX
- EACH FOOTING FORM REQUIRES 1/3 CU. YD. OF READY MIX CONCRETE. FILL THE FOOTING FORMS ON LEVEL SURFACE WITH CONCRETE BEFORE SETTING THE VAULTS

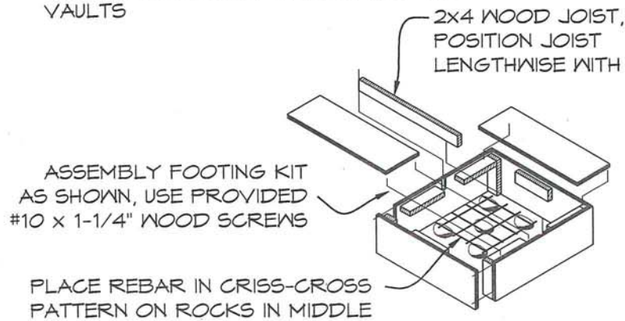

2 FOOTING FORM BOX

SCALE: 1/4" = 1'-0"

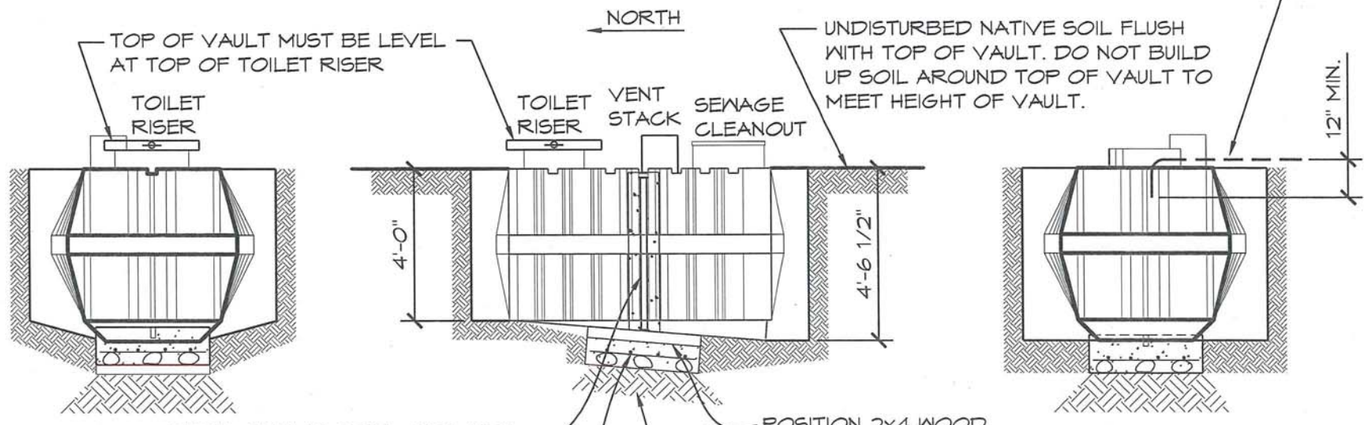

1 750 GAL. VAULT INSTALLATION

SCALE: 1/4" = 1'-0"

3-3-16
NABIL M. HATHA
STATE OF WASHINGTON
41133
REGISTERED
PROFESSIONAL ENGINEER
EXPIRES 7-17

Precision Structural Engineering, Inc.
www.structure1.com
Klamath Falls Office
250 Main Klamath Falls, Oregon 97603
Phone: (541) 850-6300 Fax: (541) 850-6233
info@structure1.com
ROMTEC216-7

ROMTEC
18240 NORTH BANK ROAD
ROSEBURG, OR 97470
(541)496-3541 FAX (541)496-0803

PROJECT: 1014 SST ASPEN STRETCH RESTROOM
POINT NO POINT LIGHTHOUSE RESTROOM
HANSVILLE, WASHINGTON

SHEET TITLE: VAULT INSTALLATION DETAILS

PLAN SET# 18574
DATE: 04/13/2015
REVISIONS

REV.	DATE:	BY

DRAWN BY: CR

SHEET NO. A5.9

DOOR SCHEDULE

NO.	SIZE (WxHxT)	DOOR	FRAME	HARDWARE GROUP	DOOR SWING	REMARKS
1	36" x 86" x 1 3/4"	SL20	F16	DO-1	RIGHT	
2	36" x 86" x 1 3/4"	SL20	F16	DO-1	RIGHT	
3	36" x 86" x 1 3/4"	SL20	F16	DO-2	RIGHT	

DOOR HARDWARE SCHEDULE (QTYS PER DOOR)

GROUP DO-1	GROUP DO-2	
2	2	EACH HINGE 4.5" x 4.5" S.S., SPRING
1	1	EACH HINGE 4.5" x 4.5" S.S., (NRP)
1	-	LEVER LOCKSET (CORRIDOR)
-	1	LEVER LOCKSET (CLASSROOM)
1	-	EACH POWER DOOR LOCK- ELECTROMAGNETIC LOCK W/ DELAYED ACTION SWITCH , SHARED TIMER
1	1	KICK PLATE, 10" X 34"
6	6	WIRE DOOR CLIPS

NOTE: ALL DOORS MAY BE OPENED FROM THE INSIDE W/O KEY, SPECIAL KNOWLEDGE, OR EFFORT. 5# MAX OPENING EFFORT DOOR IS EQUIPPED W/ SINGLE-EFFORT, NON-GRASP HARDWARE. DOOR COMPLIES WITH ADA REQUIREMENT FOR AN INSIDE LOCK.

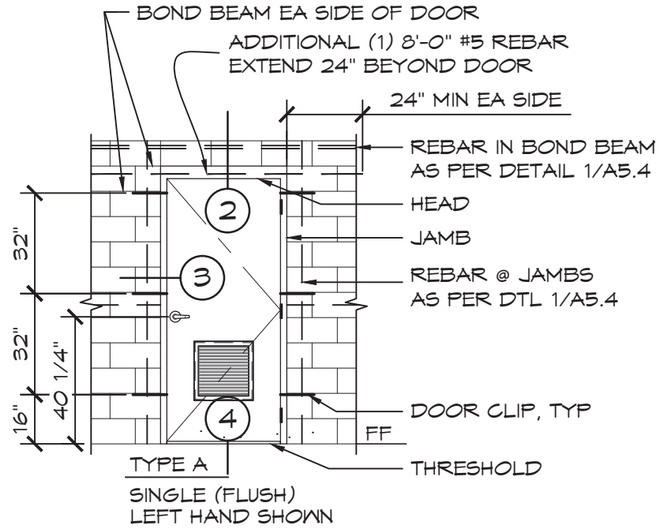

1 DOOR DETAIL

SCALE: 1/4" = 1'-0"

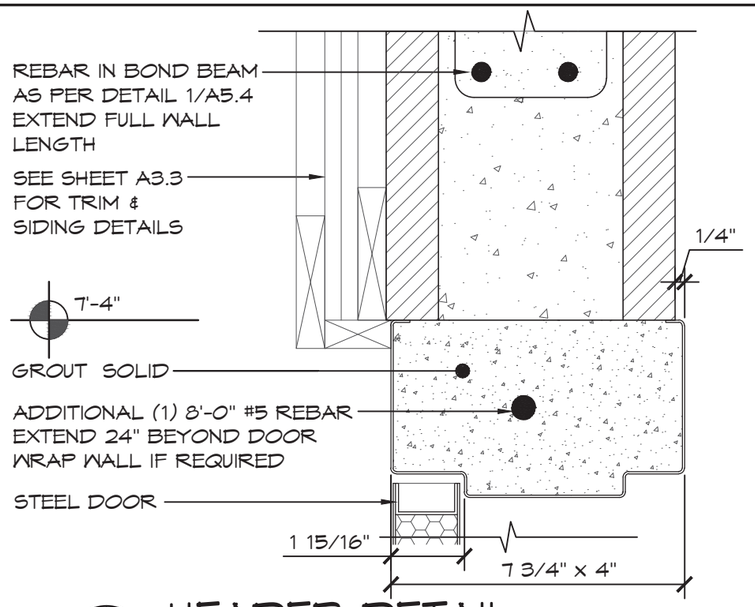

2 HEADER DETAIL

SCALE: 3" = 1'-0"

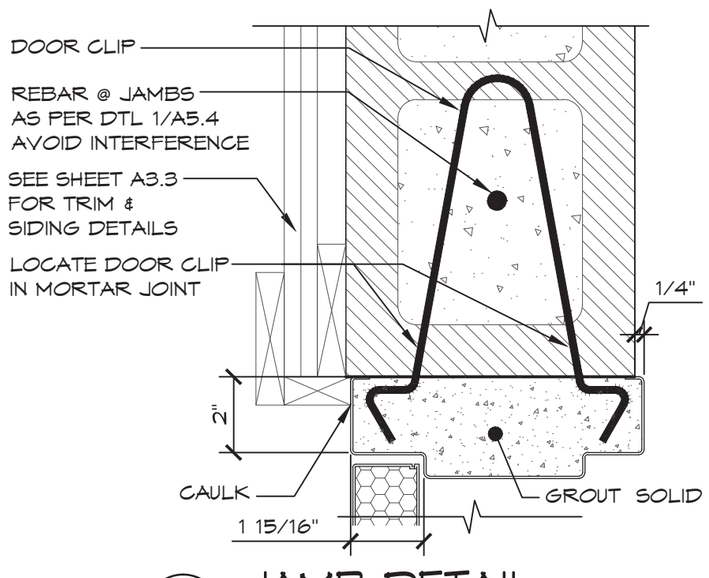

3 JAMB DETAIL

SCALE: 3" = 1'-0"

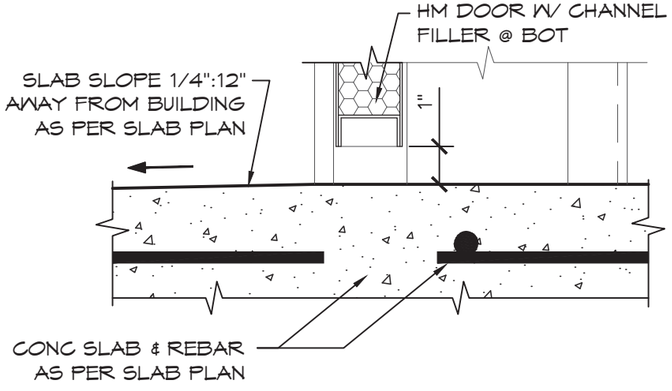

4 THRESHOLD DETAIL

SCALE: 3" = 1'-0"

3/03/2016

CERTIFIED BATHROOM DESIGNER
CBD
Cassandra Ruport
CBD
ID #1063772
★ NKBA ★
Cassandra Ruport

EXPIRES: 12/31/2016

Precision Structural Engineering, Inc.
www.structure1.com
Klamath Falls Office
250 Main Klamath Falls, Oregon 97603
Phone: (541) 850-0300 Fax: (541) 850-0233
info@structure1.com
ROMTEC216-7

ROMTEC
18240 NORTH BANK ROAD
ROSEBURG, OR 97470
(541)-496-3541 FAX (541)-496-0803

PROJECT: 1014 SST ASPEN STRETCH RESTROOM
POINT NO POINT LIGHTHOUSE RESTROOM
HANSVILLE, WASHINGTON

SHEET TITLE: DOOR SCHEDULE

PLAN SET# 18574

DATE: 04/13/2015

REVISIONS

REV.	DATE:	BY

DRAWN BY: CR

SHEET NO. A6.1

WINDOW SCHEDULE

SYM	SIZE	INSIDE INSERT	SLOPE	ANCHORS SILL		ANCHORS HYP	
(1)	73 3/8" x 47 1/8" x 10 7/16"	1/8" POLYCARBONATE	6:12	5		10	ROMTEC S1-18574
(2)	73 3/8" x 47 1/8" x 10 7/16"	1/8" POLYCARBONATE	6:12	5		10	ROMTEC S1-18574
							OPPOSITE

HARDWARE

QTY PER WINDOW

10 #14 x 1" WOOD SCREWS

5 1/2" x 3 3/4" EXPANSION ANCHOR BOLTS

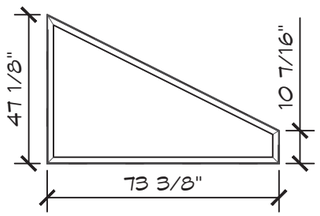

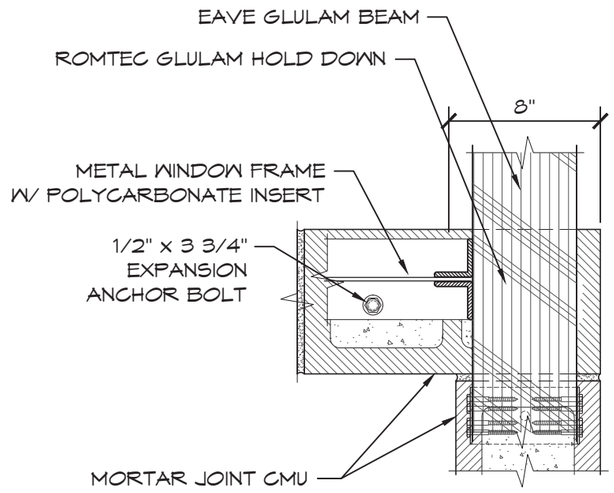

3 WINDOW CORNER DETAIL

SCALE: 1 1/2" = 1'-0"

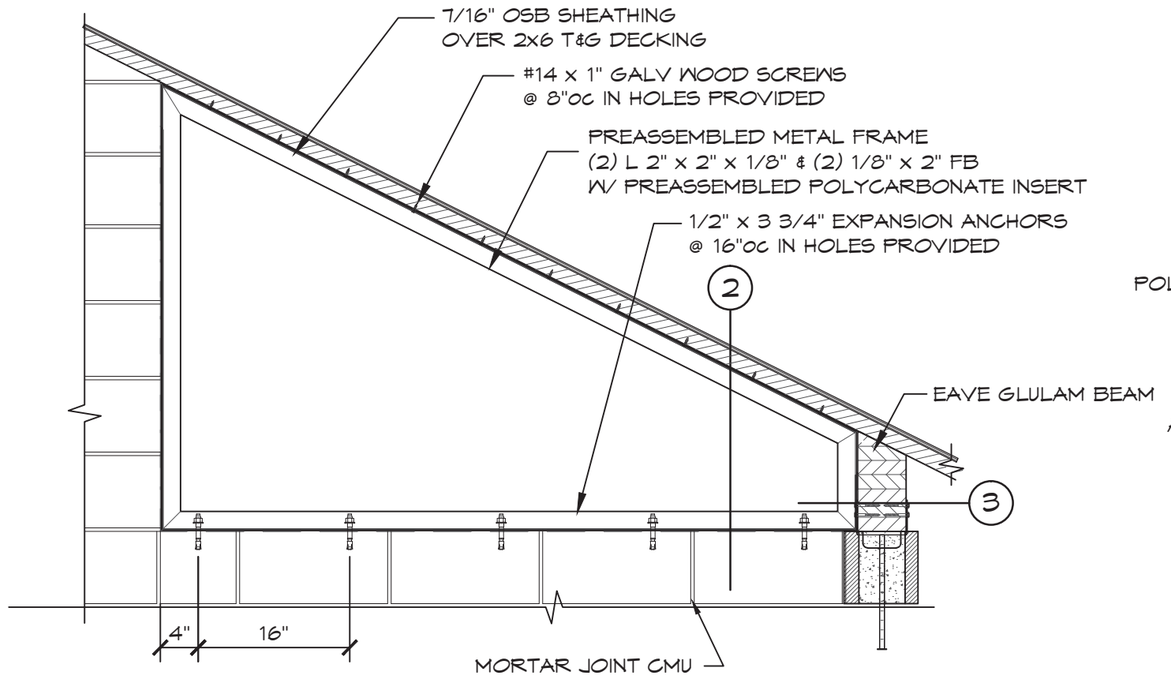

1 WINDOW DETAIL

SCALE: 3/4" = 1'-0"

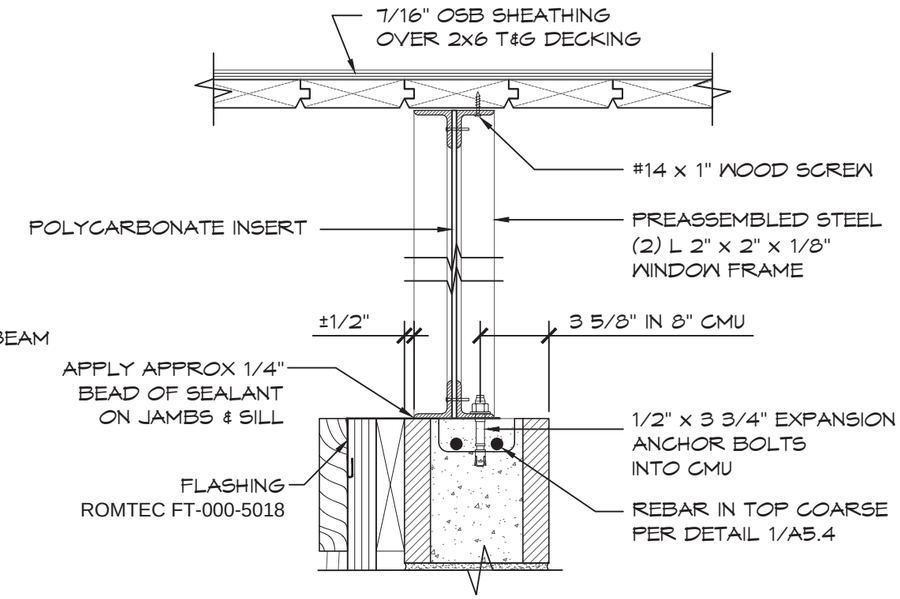

2 WINDOW SECTION

SCALE: 1 1/2" = 1'-0"

3/03/2016

CERTIFIED BATHROOM DESIGNER
CBD
Cassandra Ruport
CBD
ID #1063772
NKBA
Cassandra Ruport

EXPIRES: 12/31/2016

Precision Structural Engineering, Inc.
www.structure1.com
Klamath Falls Office
250 Main Klamath Falls, Oregon 97603
Phone: (541) 850-8300 Fax: (541) 850-8233
info@structure1.com
ROMTEC216-7

ROMTEC
18240 NORTH BANK ROAD
ROSEBURG, OR 97470
(541)-496-3541 FAX (541)-496-0803

PROJECT: 1014 SST ASPEN STRETCH RESTROOM
POINT NO POINT LIGHTHOUSE RESTROOM
HANSVILLE, WASHINGTON

SHEET TITLE: WINDOW SCHEDULE AND DETAILS

PLAN SET# 18574

DATE: 04/13/2015

REVISIONS

REV.	DATE:	BY

DRAWN BY: CR

SHEET NO. A6.4

WOOD FILLER WALL SCHEDULE

SYM	SIZE	FRAME	SLOPE	REMARKS
(3)	90" x 56 1/4" x 10 5/8"	2x DF WOOD	6:12	
(4)	90" x 56 1/4" x 10 5/8"	2x DF WOOD	6:12	

HARDWARE

(8) #12 x 2 1/2" WOOD SCREWS

(4) 1/2" x 3 3/4" EXPANSION ANCHOR BOLTS

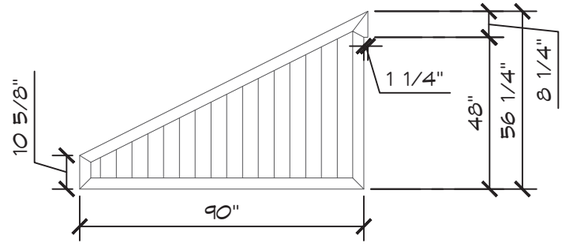

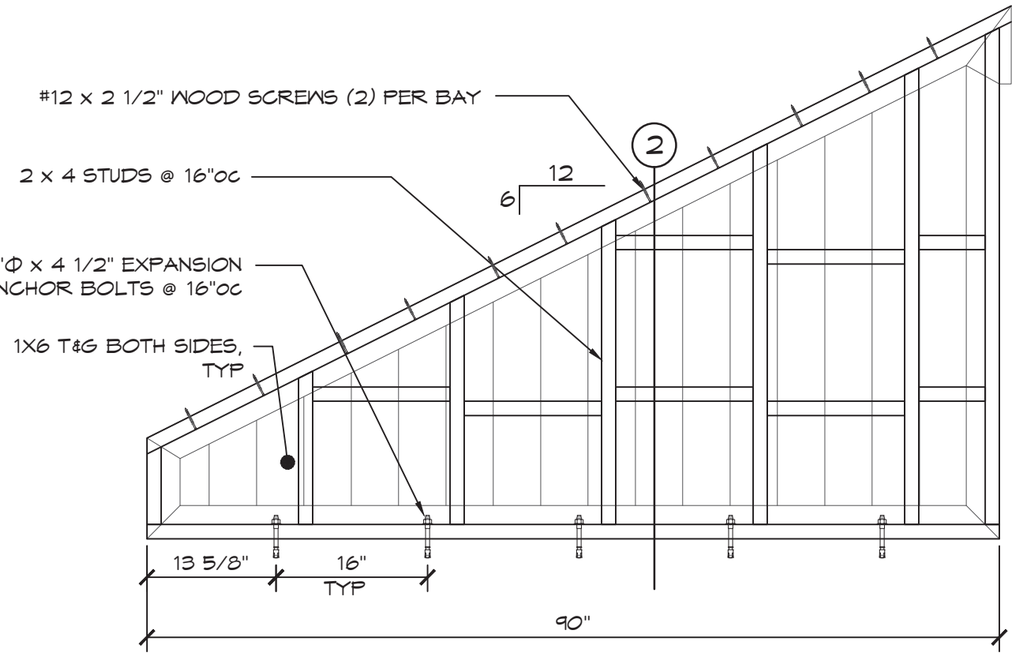

1 WOOD FILLER WALL DETAIL

SCALE: 3/4" = 1'-0"

RESTROOM FIXED SIDE:
1X6 T&G FASTEN TOP & BOTTOM TO STUDS &/OR BLOCKING W/ FINISHED NAILS

RESTROOM REMOVABLE SIDE:
T&G W/ 1X4 TRIM FASTEN TO 7/16" OSB WITH ADHESIVE AND STAPLES. USE #12 x 1 1/4" WOOD SCREWS @ 6"oc PANEL EDGES.

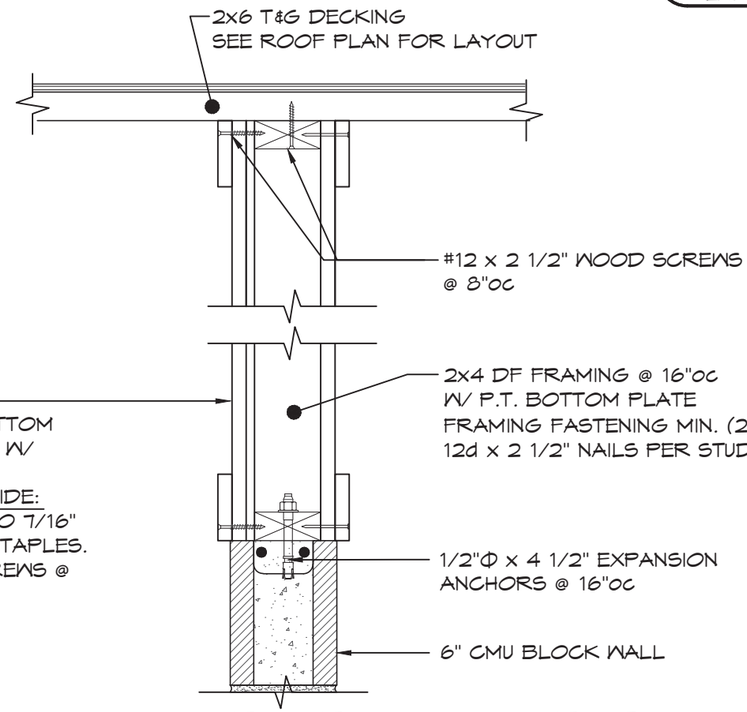

2 2x6 WOOD FILLER WALL SECTION

SCALE: 1 1/2" = 1'-0"

3/03/2016

CERTIFIED BATHROOM DESIGNER
CBD
Cassandra Ruport
CBD
ID #1063772
NKBA
Cassandra Ruport

EXPIRES: 12/31/2016

Precision Structural Engineering, Inc.
www.structure1.com
Klamath Falls Office
250 Main Klamath Falls, Oregon 97603
Phone: (541) 850-6300 Fax: (541) 850-6233
info@structure1.com
ROMTEC215-7

ROMTEC
18240 NORTH BANK ROAD
ROSEBURG, OR 97470
(541)-496-3541 FAX (541)-496-0803

PROJECT: 1014 SST ASPEN STRETCH RESTROOM
POINT NO POINT LIGHTHOUSE RESTROOM
HANSVILLE, WASHINGTON

SHEET TITLE: WOOD FILLER WALL DETAILS

PLAN SET# 18574

DATE: 04/13/2015

REVISIONS

REV.	DATE:	BY

DRAWN BY: CR

SHEET NO. A6.5

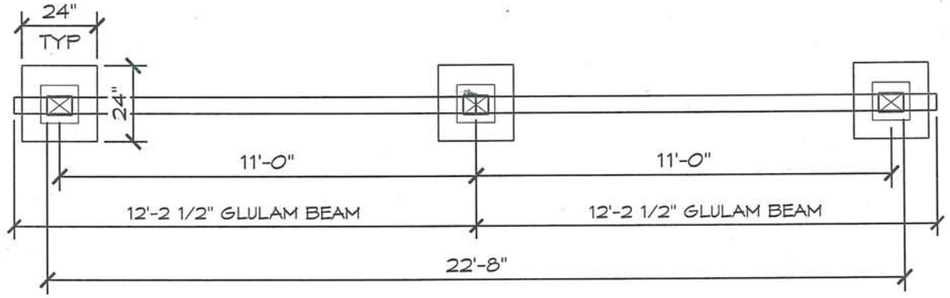

PLAN

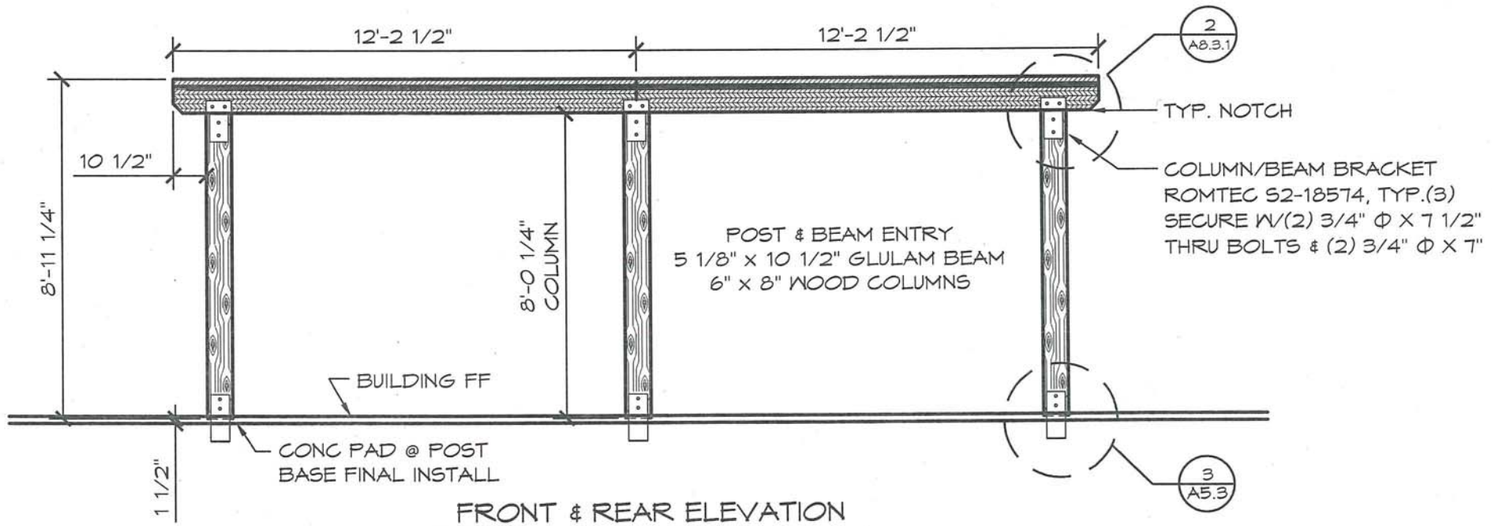

FRONT & REAR ELEVATION

1 POST & BEAM ENTRY

SCALE: 1/4" = 1'-0"

Precision Structural Engineering, Inc.
www.structure1.com
Klamath Falls Office
250 Main Klamath Falls, Oregon 97603
Phone: (541) 850-6300 Fax: (541) 850-6233
info@structure1.com
ROMTEC216-7

ROMTEC
1824O NORTH BANK ROAD
ROSEBURG, OR 97470
(541)-496-3541 FAX (541)-496-0803

PROJECT: 1014 SST ASPEN STRETCH RESTROOM
POINT NO POINT LIGHTHOUSE RESTROOM
HANSVILLE, WASHINGTON

SHEET TITLE: POST & BEAM ENTRY DETAILS

PLAN SET# 18574

DATE: 04/13/2015

REVISIONS

REV.	DATE:	BY
2	03-03-2016	CR

DRAWN BY: CR

SHEET NO. A7.1

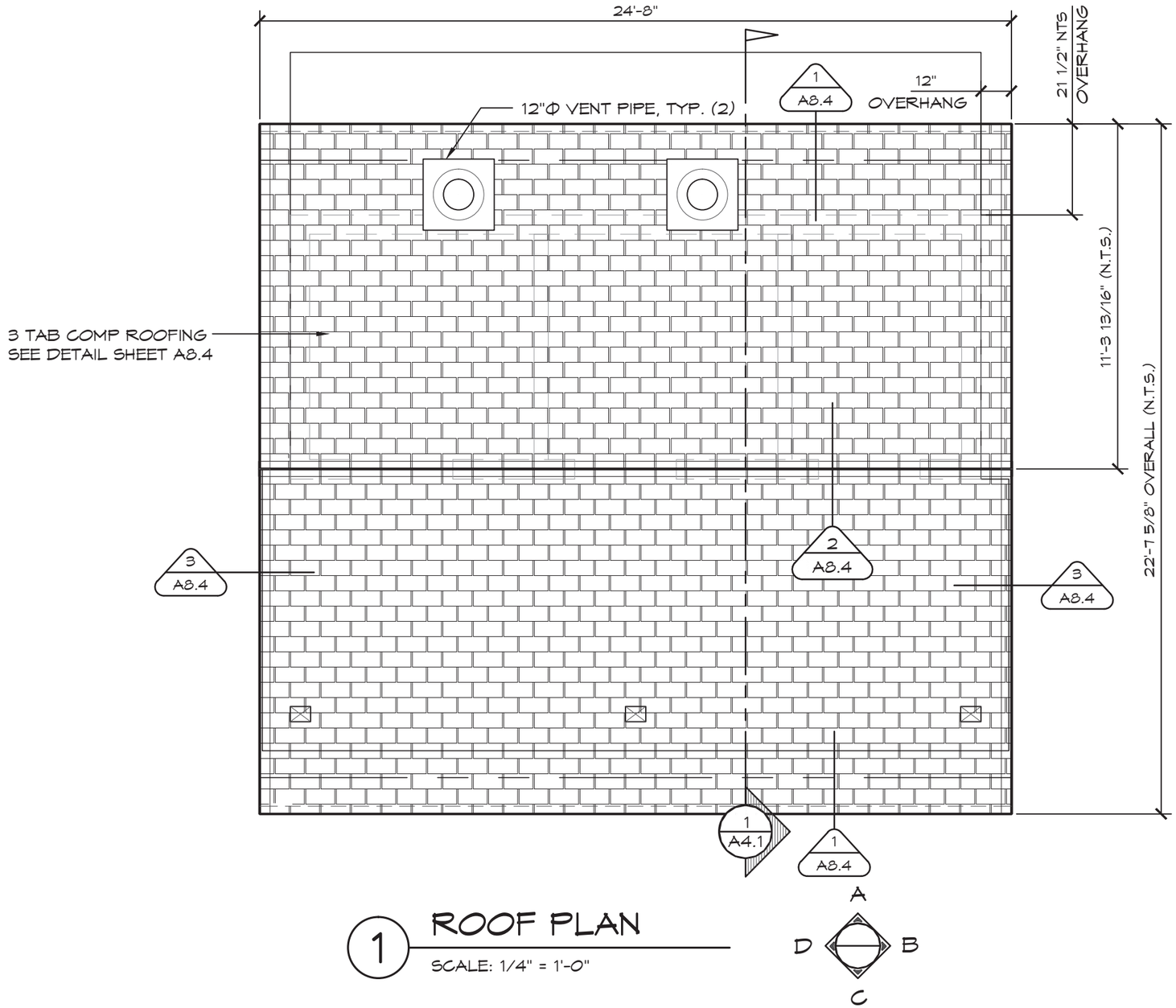

1 ROOF PLAN

SCALE: 1/4" = 1'-0"

3/03/2016

CERTIFIED BATHROOM DESIGNER
CBD
Cassandra Ruport
CBD
ID #1063772
★ NKBA ★
Cassandra Ruport
EXPIRES: 12/31/2016

Precision Structural Engineering, Inc.
www.structure1.com
Klamath Falls Office
250 Main Klamath Falls, Oregon 97603
Phone: (541) 850-6300 Fax: (541) 850-6233
info@structure1.com
ROMTEC2107
ROMTEC
16240 NORTH BANK ROAD
ROSEBURG, OR 97470
(541)-496-3541 FAX (541)-496-0803

PROJECT: 1014 SST ASPEN STRETCH RESTROOM
POINT NO POINT LIGHTHOUSE RESTROOM
HANSVILLE, WASHINGTON
SHEET TITLE: ROOF PLAN

PLAN SET# 18574
DATE: 04/13/2015
REVISIONS

REV.	DATE:	BY

DRAWN BY: CR

SHEET NO.
A8.1

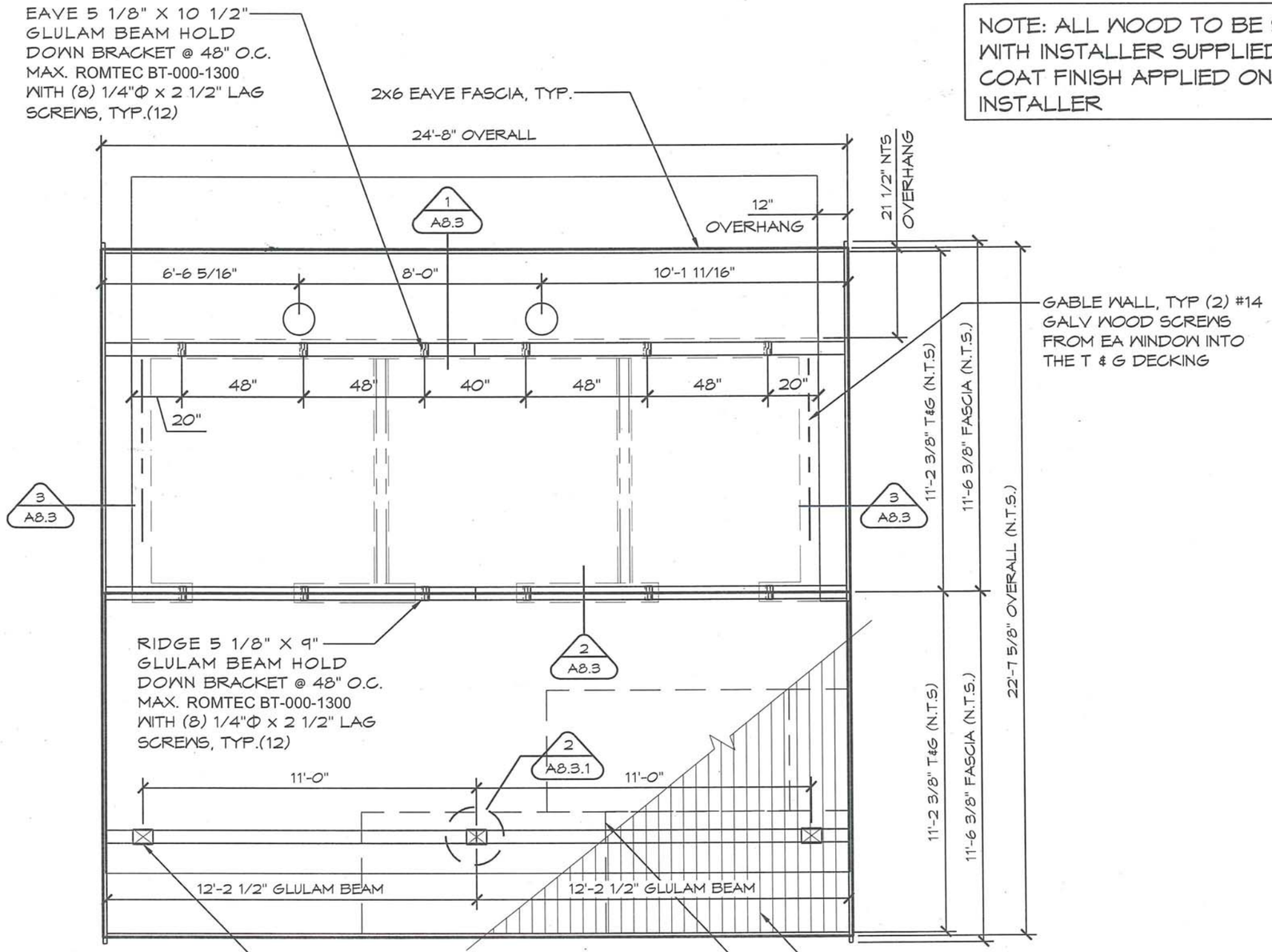

NOTE: ALL WOOD TO BE SEALED WITH INSTALLER SUPPLIED CLEAR COAT FINISH APPLIED ONSITE BY INSTALLER

1 ROOF FRAMING PLAN

SCALE: 1/4" = 1'-0"

A
D B
C

NABIL M. [illegible]
STATE OF WASHINGTON
41133
REGISTERED
PROFESSIONAL ENGINEER
EXPIRES 7-17

3-3-16

Precision Structural Engineering, Inc.
www.structure1.com
Klamath Falls Office
250 Main Klamath Falls, Oregon 97603
Phone: (541) 850-6300 Fax: (541) 850-6233
ROMTEC2167
ROMTEC
1840 NORTH BANK ROAD
ROSEBURG, OR 97470
(541)-496-3541 FAX (541)-496-0803

PROJECT: 1014 SST ASPEN STRETCH RESTROOM
POINT NO POINT LIGHTHOUSE RESTROOM
HANSVILLE, WASHINGTON

SHEET TITLE: ROOF FRAMING PLAN

PLAN SET# 18574

DATE: 04/13/2015

REVISIONS

REV.	DATE:	BY

DRAWN BY: CR

SHEET NO. A8.2

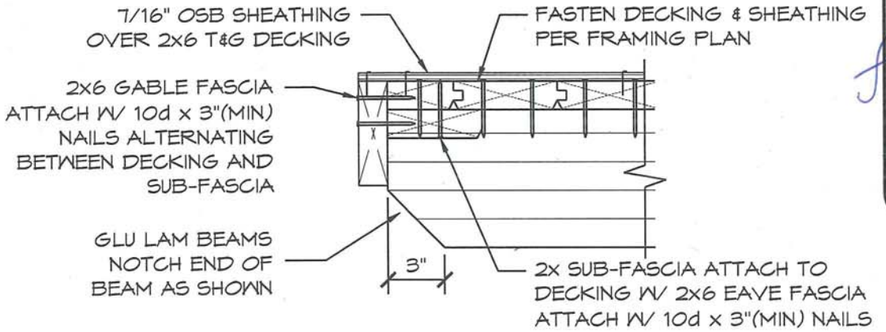

3 GABLE EAVE DETAIL, TYP

SCALE: 1 1/2" = 1'-0"

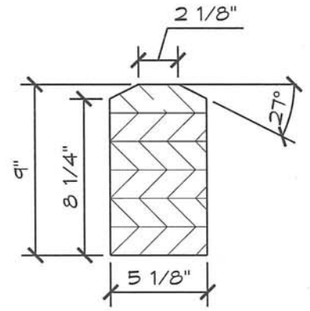

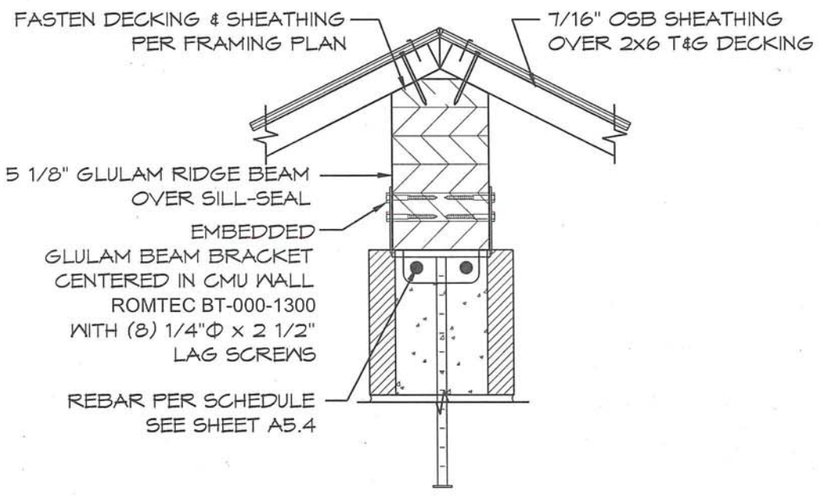

2 RIDGE CONNECTION DETAIL

SCALE: 1 1/2" = 1'-0"

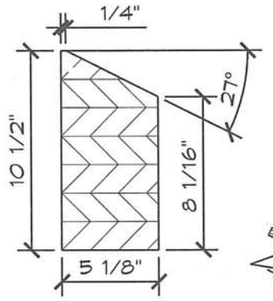

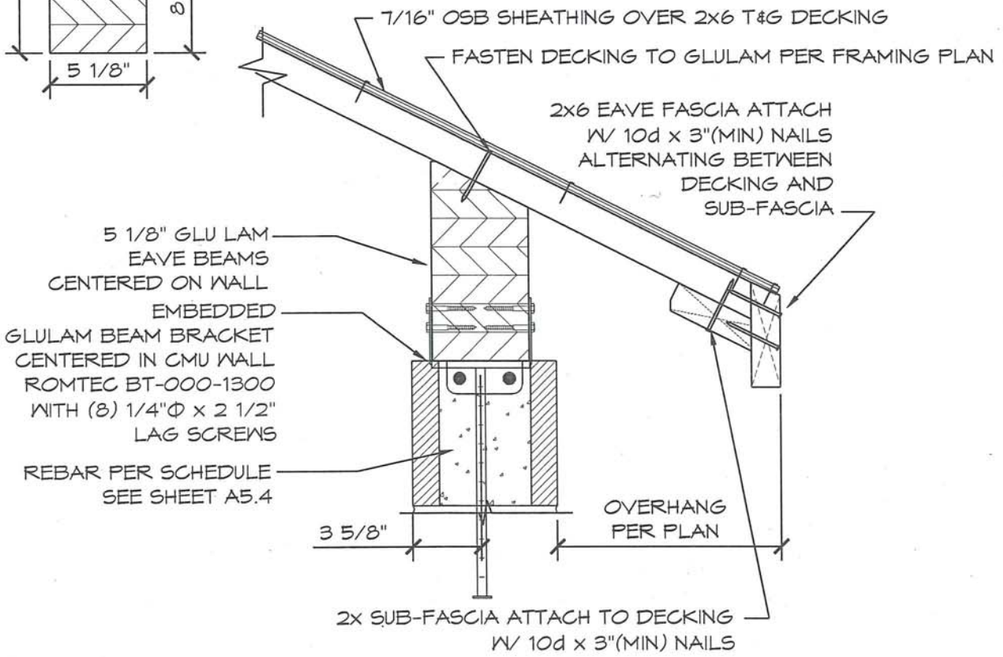

1 EAVE CONNECTION DETAIL

SCALE: 1 1/2" = 1'-0"

3-3-16

Precision Structural Engineering, Inc.
www.structure1.com
Klamath Falls Office
250 Main Klamath Falls, Oregon 97603
Phone: (541) 850-6300 Fax: (541) 850-6233
info@structure1.com
ROMTEC216-7

ROMTEC
16240 NORTH BANK ROAD
ROSEBURG, OR 97470
(541)-496-3541 FAX (541)-496-0803

PROJECT: 1014 SST ASPEN STRETCH RESTROOM
POINT NO POINT LIGHTHOUSE RESTROOM
HANSVILLE, WASHINGTON

SHEET TITLE: ROOF PANEL CONNECTION DETAILS

PLAN SET# 18574

DATE: 04/13/2015

REVISIONS

REV.	DATE:	BY

DRAWN BY: CR

SHEET NO. A8.3

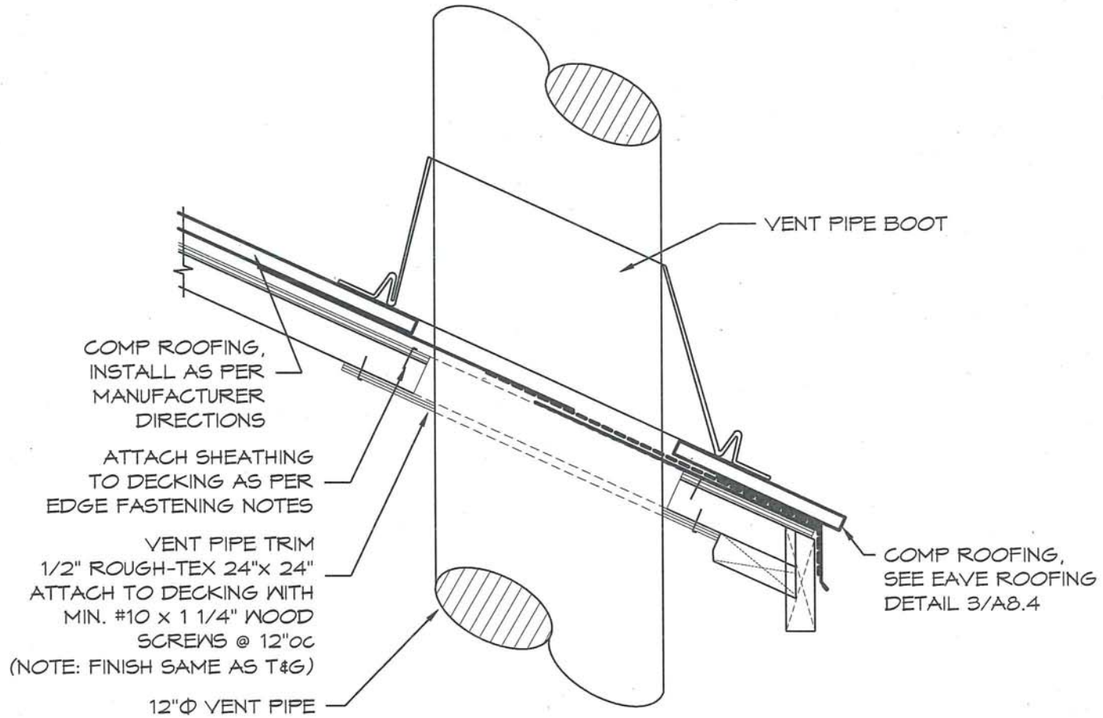

1 VENT PIPE BOOT FLASHING DETAIL

SCALE: 1 1/2" = 1'-0"

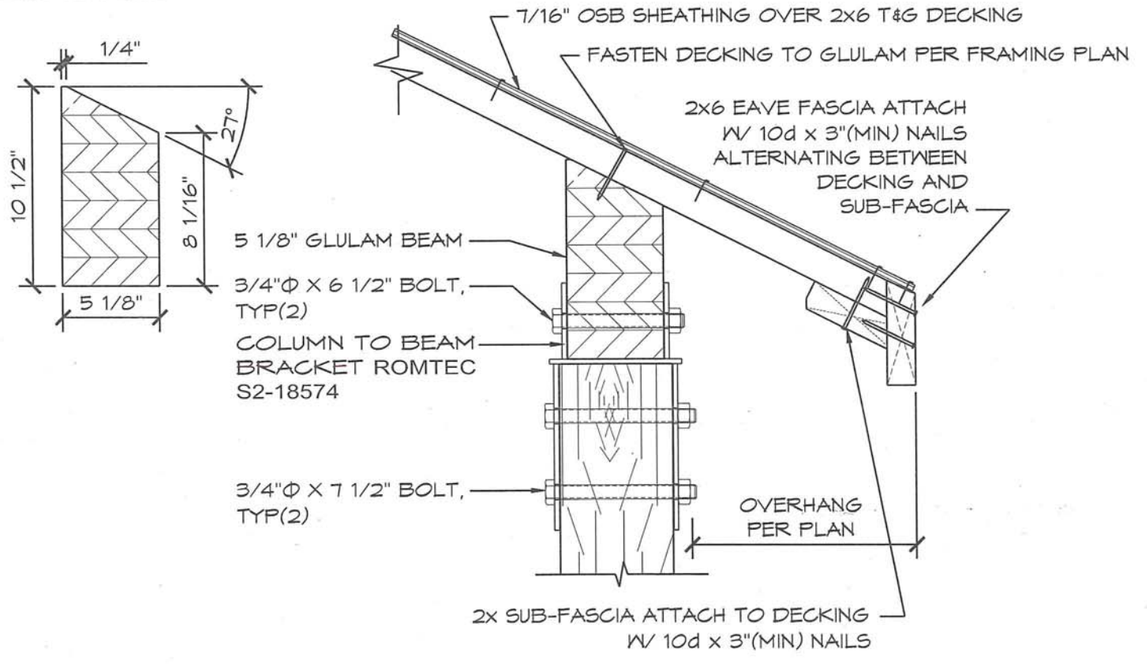

2 EAVE CONNECTION DETAIL

SCALE: 1 1/2" = 1'-0"

3-3-16

NABIL M. [illegible]
STATE OF WASHINGTON
41133
REGISTERED
PROFESSIONAL ENGINEER
EXPIRES 7-17

Precision Structural Engineering, Inc.
www.structure1.com
Klamath Falls Office
250 Main Klamath Falls, Oregon 97603
Phone: (541) 850-8300 Fax: (541) 850-8233
info@structure1.com
ROMTEC216-7

ROMTEC
1624O NORTH BANK ROAD
ROSEBURG, OR 97470
(541)-496-3541 FAX (541)-496-0803

PROJECT: 1014 SST ASPEN STRETCH RESTROOM
POINT NO POINT LIGHTHOUSE RESTROOM
HANSVILLE, WASHINGTON

SHEET TITLE: ROOF PANEL CONNECTION DETAILS

PLAN SET# 18574

DATE: 04/13/2015

REVISIONS

REV.	DATE:	BY

DRAWN BY: CR

SHEET NO. A8.3.1

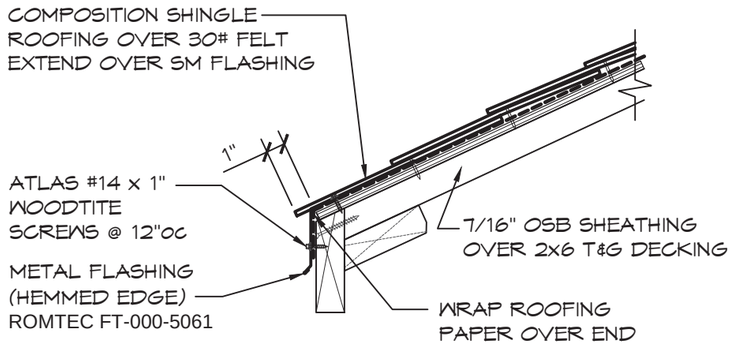

1 EAVE ROOFING DETAIL

SCALE: 1 1/2" = 1'-0"

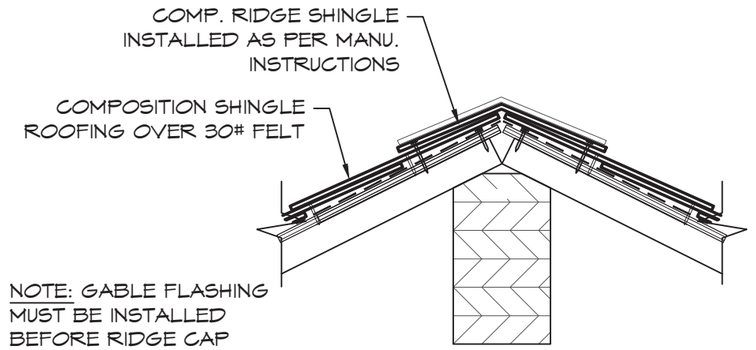

2 RIDGE ROOFING DETAIL

SCALE: 1 1/2" = 1'-0"

NOTE:
CONTRACTOR SHALL INSTALL ROOFING IN STRICT ACCORDANCE WITH INSTALLATION REQUIREMENTS OF ROOFING MANUFACTURER.

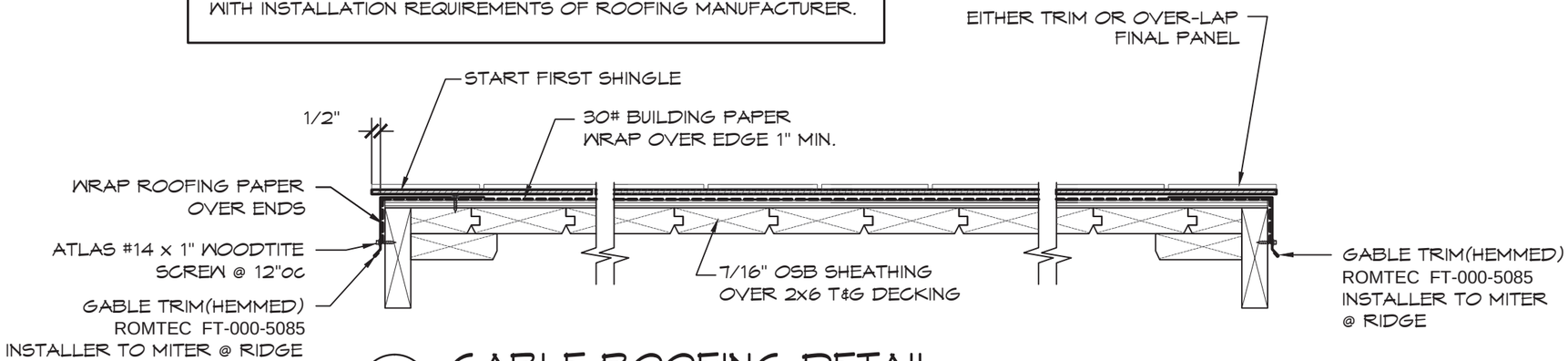

3 GABLE ROOFING DETAIL

SCALE: 1 1/2" = 1'-0"

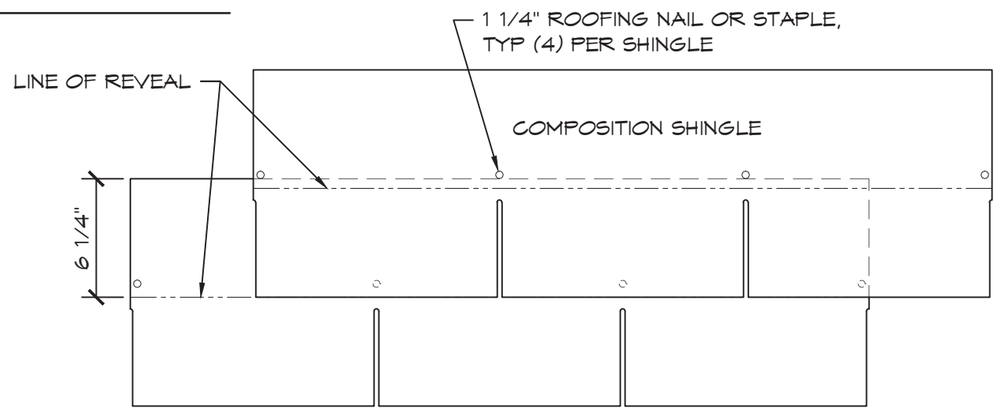

4 ROOFING DETAIL

SCALE: 1 1/2" = 1'-0"

3/03/2016

CERTIFIED BATHROOM DESIGNER
CBD
Cassandra Ruport
CBD
ID #1063772
NKBA
Cassandra Ruport

EXPIRES: 12/31/2016

Precision Structural Engineering, Inc.
www.structure1.com
Klamath Falls Office
250 Main Klamath Falls, Oregon 97603
Phone: (541) 850-8300 Fax: (541) 850-8233
info@structure1.com
ROMTEC216-7

ROMTEC
16240 NORTH BANK ROAD
ROSEBURG, OR 97470
(541)-496-3541 FAX (541)-496-0803

PROJECT: 1014 SST ASPEN STRETCH RESTROOM
POINT NO POINT LIGHTHOUSE RESTROOM
HANSVILLE, WASHINGTON

SHEET TITLE: ROOFING DETAILS

PLAN SET# 18574

DATE: 04/13/2015

REVISIONS

REV.	DATE:	BY

DRAWN BY: CR

SHEET NO. A8.4

GENERAL ELECTRICAL NOTES:

1. ALL WORK SHALL COMPLY TO NATIONAL ELECTRICAL CODE, STATE AND LOCAL CODES.
2. OWNER TO PROVIDE TEMPORARY POWER AS REQUIRED DURING COURSE OF CONSTRUCTION.
3. THE INSTALLER SHALL FURNISH & INSTALL SPECIFICATION GRADE CIRCUIT BREAKERS, WIRING, CONDUIT, GFI RECEPTACLES THROUGHOUT, SWITCHES, AND STAINLESS STEEL COVERPLATES.
4. ELECTRICAL CONDUIT IS TO BE RUN WITHIN THE WALL WHEN POSSIBLE, EXCEPT IN THE MECH ROOM.
5. FOR MECHANICAL ROOM ALL EXPOSED CONDUIT IS TO BE SURFACE MOUNTED AND RUN TIGHT TO CEILING AS REQD.
6. COORDINATE AC OUTLET HEIGHTS WITH OWNER PRIOR TO ROUGH-IN.

ELECTRICAL FIXTURE SCHEDULE:

BP	100 AMP MAIN BREAKER PANEL
	HOME RUN TO BREAKER PANEL
	110 VAC DUPLEX RECEPTACLE, GROUND FAULT PROTECTED MOUNTED A MIN OF 15" ABOVE THE FLOOR
$	SWITCH, SINGLE POLE MOUNTED A MAX OF 48" ABOVE THE FLOOR
LF-1	LIGHT FIXTURE
T	TIMER
P	POWER LOCKS
S	SENSOR
$A	DELAYED ACTION SWITCH (PUSH BUTTON) MOUNTED A MAX OF 48" ABOVE THE FLOOR

REGISTERED PROFESSIONAL ENGINEER
65580
Greg Pride
OREGON
JULY 13, 2004
GREGORY L. PRIDE
EXPIRES 12-31-16

NOT LICENSED IN WASHINGTON

PRELIMINARY

ROMTEC
18240 NORTH BANK ROAD
ROSEBURG, OR 97470
(541)-496-3541 FAX (541)-496-0803

PROJECT: 1014 SST ASPEN STRETCH RESTROOM
POINT NO POINT LIGHTHOUSE RESTROOM
HANSVILLE, WASHINGTON

SHEET TITLE: ELECTRICAL SCHEDULE

PLAN SET# 18574

DATE: 04/13/2015

REVISIONS

REV.	DATE:	BY

DRAWN BY: CR

SHEET NO. E1

VERIFY REQUIREMENTS
SERVICE, TIE INTO EXISTING,
UNDERGROUND ELECTRICAL

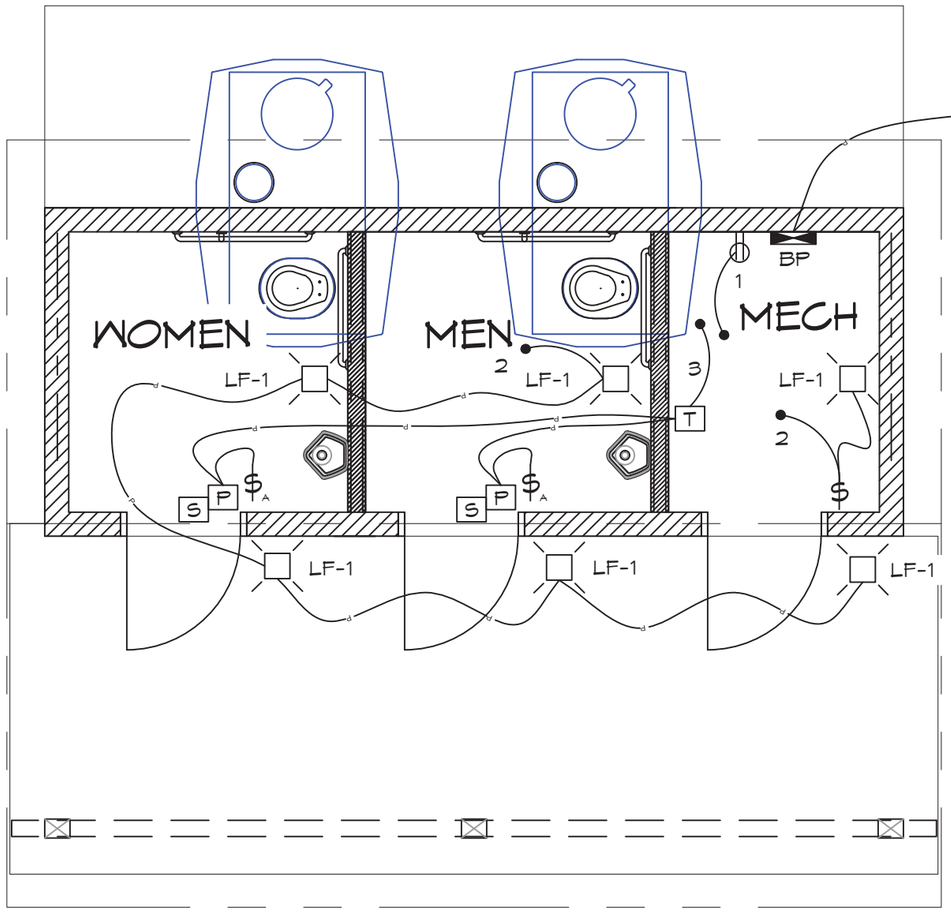

1 ELECTRICAL PLAN

SCALE: 1/4" = 1'-0"

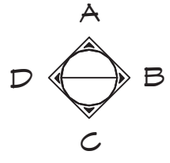

REGISTERED PROFESSIONAL ENGINEER
65580
Greg Pride
OREGON
JULY 13, 2004
GREGORY L. PRIDE
EXPIRES 12-31-16

NOT LICENSED IN WASHINGTON

PRELIMINARY

ROMTEC
18240 NORTH BANK ROAD
ROSEBURG, OR 97470
(541)-496-3541 FAX (541)-496-0803

PROJECT: 1014 SST ASPEN STRETCH RESTROOM
POINT NO POINT LIGHTHOUSE RESTROOM
HANSVILLE, WASHINGTON

SHEET TITLE: ELECTRICAL PLAN

PLAN SET# 18574

DATE: 04/13/2015

REVISIONS

REV.	DATE:	BY
1	10-13-2015	TH

DRAWN BY: CR

SHEET NO. E2

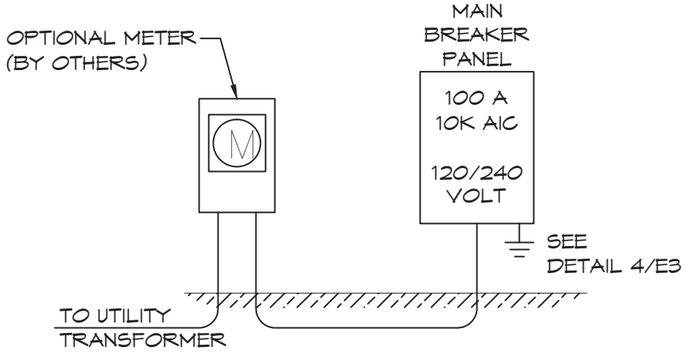

1 ONE-LINE DIAGRAM

SCALE: NONE

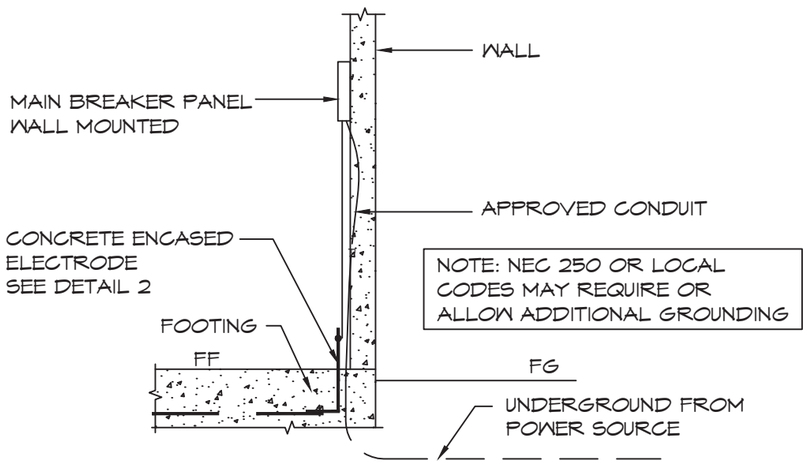

2 RISER DIAGRAM

SCALE: NONE

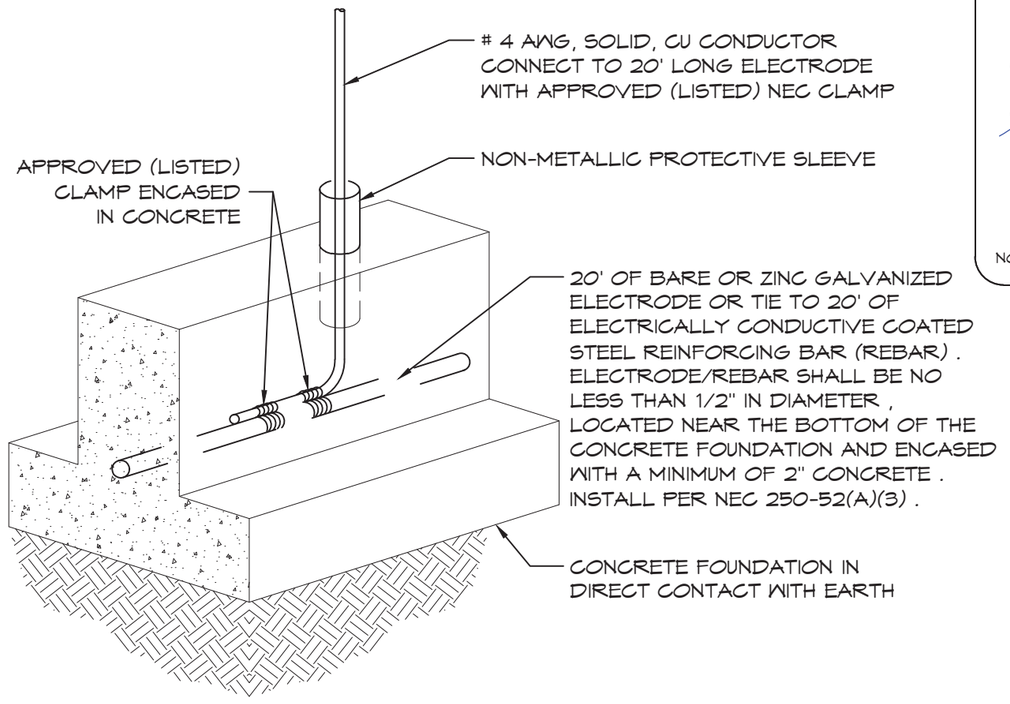

3 CONCRETE ENCASED SERVICE GROUND

SCALE: NONE

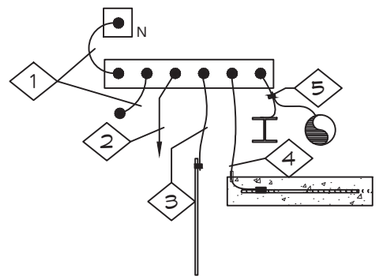

KEYED NOTES

1. #4 CU MAIN BONDING JUMPER AND EQUIPMENT BONDING JUMPER PER NEC 250.28(D) AND 250.102(C)
2. #4 CU GROUNDING ELECTRODE SYSTEM JUMPER PER NEC 250.52(A)(1,2 AND 4). SIZE GROUND RING CONNECTIONS PER 250.66(C)
3. #6 CU TO ROD, PIPE, OR PLATE ELECTRODES PER NEC 250.66(A)
4. #4 CU TO CONCRETE ENCASED ELECTRODE PER NEC 250.52(A)(3) AND 250.66(B)
5. WHERE REQUIRED, BOND PIPING SYSTEMS AND EXPOSED STRUCTURAL STEEL PER NEC 250.104

4 GROUNDING/BONDING DETAIL

SCALE: NONE

REGISTERED PROFESSIONAL ENGINEER
65580
Greg Pride
OREGON
JULY 13, 2004
GREGORY L. PRIDE
EXPIRES 12-31-16

NOT LICENSED IN WASHINGTON

PRELIMINARY

ROMTEC
18240 NORTH BANK ROAD
ROSEBURG, OR 97470
(541)-496-3541 FAX (541)-496-0803

PROJECT: 1014 SST ASPEN STRETCH RESTROOM
POINT NO POINT LIGHTHOUSE RESTROOM
HANSVILLE, WASHINGTON

SHEET TITLE: ELECTRICAL RISER DETAILS

PLAN SET# 18574

DATE: 04/13/2015

REVISIONS

REV.	DATE:	BY

DRAWN BY: CR

SHEET NO. E3

MAIN BREAKER PANEL				
100	AMP	MAIN BREAKER	120 / 240 VOLTS	1-PHASE, 3-WIRE
FEEDER SIZE			3# 2, 1# 8 GRD, 1 1/4" C	SURFACE MOUNTED

LOAD DISTRIBUTION	LTG	REC	MOTOR	DATA	EXTG	HEAT	MISC	PH-A	PH-B	= TOTAL	AMPS	WITH SPARE	25%
CONNECTED VA	252	180	0	0	0	0	60	240	252	492	2	615	3
DIVERSITY FACTOR	125%	100%	100%	100%	65%	100%	100%						
DIVERSIFIED VA	315	180	0	0	0	0	60	240	315	555	3	694	3

PL	T	LOAD	VA	HP	PHW	GND	CON	BKR	PH			BKR	CON	GND	PHW	HP	VA	LOAD	T	PL
1	R	RECEPTACLE	180		12	12	1/2	20	1	A	1	20	1/2	12	12		60	LOCKS	O	2
3	L	LIGHTS	252		12	12	1/2	20	1	B										4
5										A										6
7										B										8
9										A										10
11										B										12

2/18/2016

GROUND & BOND PER NEC

① ELECTRICAL PANEL SCHEDULE

SCALE: NONE

REGISTERED PROFESSIONAL ENGINEER
65580
Greg Pride
OREGON
JULY 13, 2004
GREGORY L. PRIDE
EXPIRES 12-31-16

NOT LICENSED IN WASHINGTON

PRELIMINARY

PROJECT: 1014 SST ASPEN STRETCH RESTROOM
POINT NO POINT LIGHTHOUSE RESTROOM
HANSVILLE, WASHINGTON

SHEET TITLE: ELECTRICAL PANEL SCHEDULE

ROMTEC
18240 NORTH BANK ROAD
ROSEBURG, OR 97470
(541)-496-3541 FAX (541)-496-0803

PLAN SET# 18574
DATE: 04/13/2015

REVISIONS		
REV.	DATE:	BY

DRAWN BY: CR

SHEET NO.
E4

RECYCLE

RECYCLE ALL USED SHIPPING MATERIALS AND LEFT OVER BUILDING MATERIALS

BLOCK SUMMARY		
Count	NO	Name
162	18	18 8x16 Smooth Bond
354	19	19 8x16 Smooth
40	20	20 8x8 Smooth End
3	21	21 8x8 Split End (1S)
34	22	22 8x16 Split Bond (1S)
4	25	25 8x16 Split Corner (1S,1E)
80	29	29 6x16 Smooth
24	30	30 6x8 Smooth End
40	31	31 6x8x16 Smooth Bond

FOUNDATION AND FOUNDATION CURB.

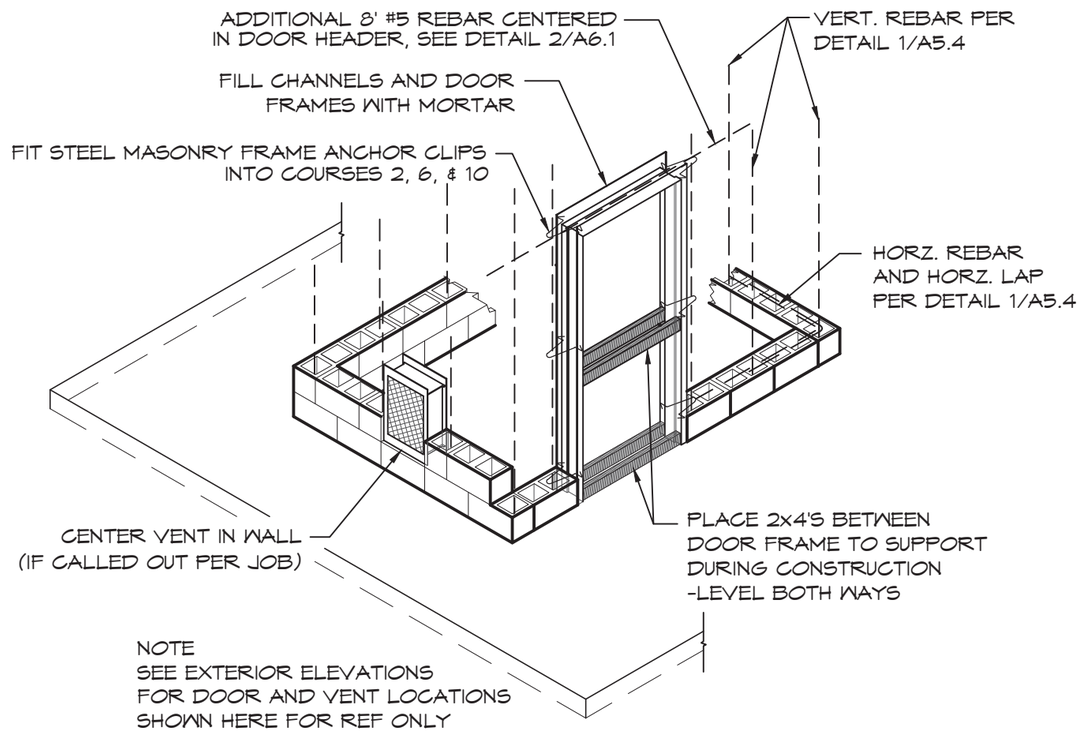

1 BLOCK INSTALLATION DETAIL

SCALE: 1/4" = 1'-0"

DO NOT STAMP

Precision Structural Engineering, Inc.
www.structure1.com
Klamath Falls Office
250 Main Klamath Falls, Oregon 97603
Phone: (541) 850-6300 Fax: (541) 850-6233
info@structure1.com
ROMTEC215-7

ROMTEC
18240 NORTH BANK ROAD
ROSEBURG, OR 97470
(541)496-3541 FAX (541)-496-0803

PROJECT: 1014 SST ASPEN STRETCH RESTROOM
POINT NO POINT LIGHTHOUSE RESTROOM
HANSVILLE, WASHINGTON

SHEET TITLE: BLOCK PLAN

PLAN SET# 18574

DATE: 04/13/2015

REVISIONS

REV.	DATE:	BY

DRAWN BY: CR

SHEET NO. B1

DO NOT STAMP

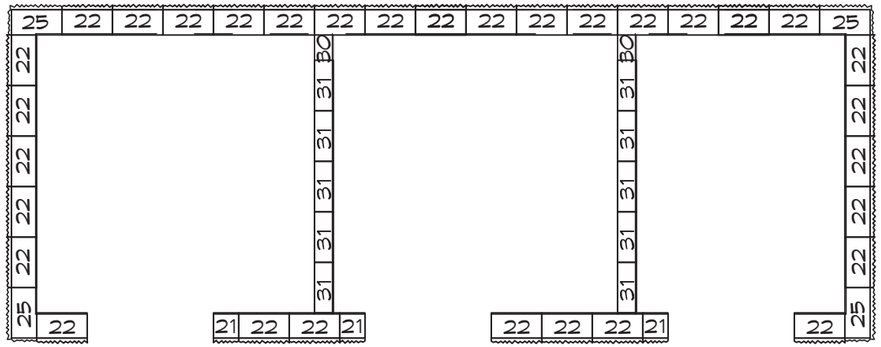

COURSE 1
BOND BEAM

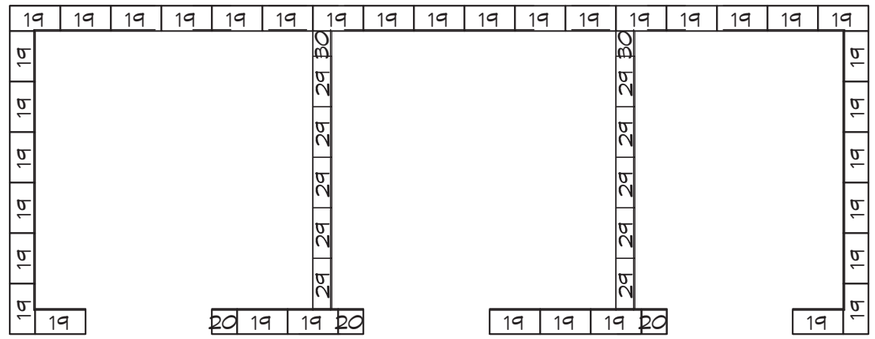

COURSE 3

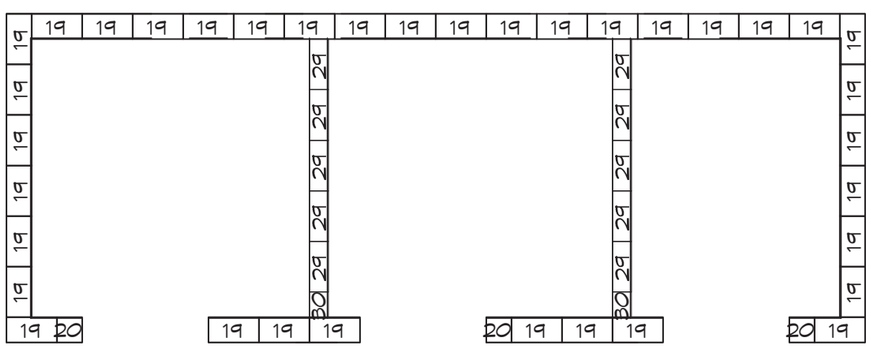

COURSE 2

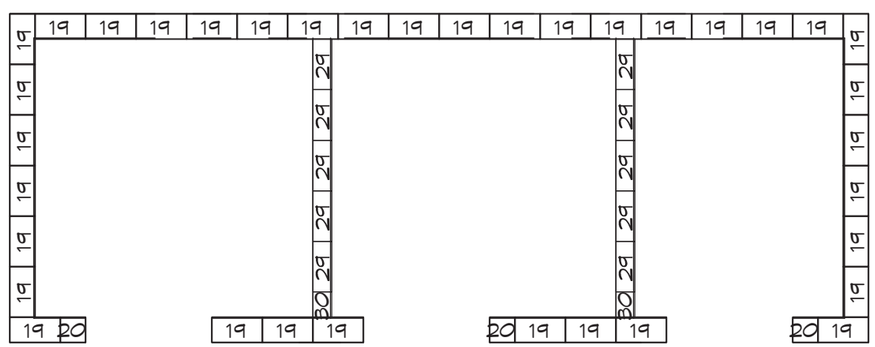

COURSE 4

Precision Structural Engineering, Inc.
www.structure1.com
Klamath Falls Office
250 Main Klamath Falls, Oregon 97603
Phone: (541) 850-6300 Fax: (541) 850-6233
info@structure1.com
ROMTEC216-7

ROMTEC
16240 NORTH BANK ROAD
ROSEBURG, OR 97470
(541)-496-3541 FAX (541)-496-0803

PROJECT: 1014 SST ASPEN STRETCH RESTROOM
POINT NO POINT LIGHTHOUSE RESTROOM
HANSVILLE, WASHINGTON

SHEET TITLE: BLOCK PLAN

PLAN SET# 18574

DATE: 04/13/2015

REVISIONS

REV.	DATE:	BY

DRAWN BY: CR

SHEET NO.
B2

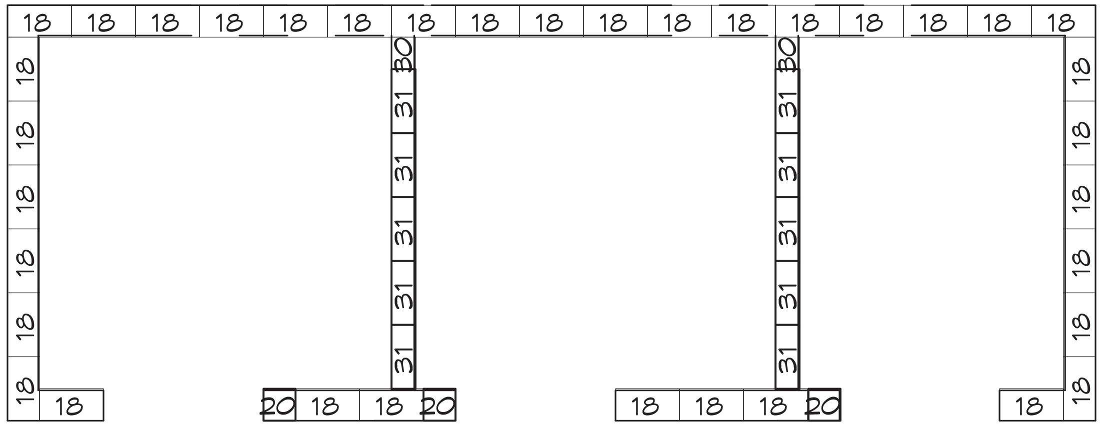

COURSE 5
BOND BEAM

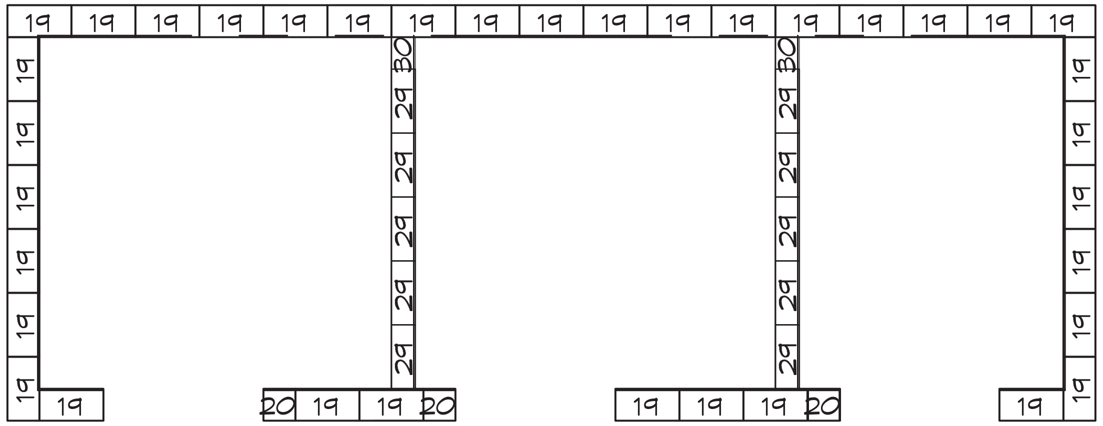

COURSE 7

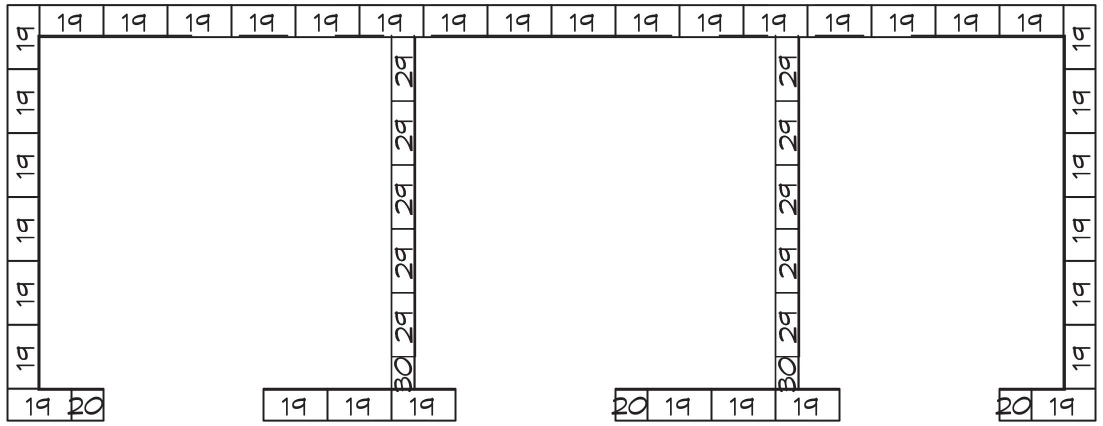

COURSE 6

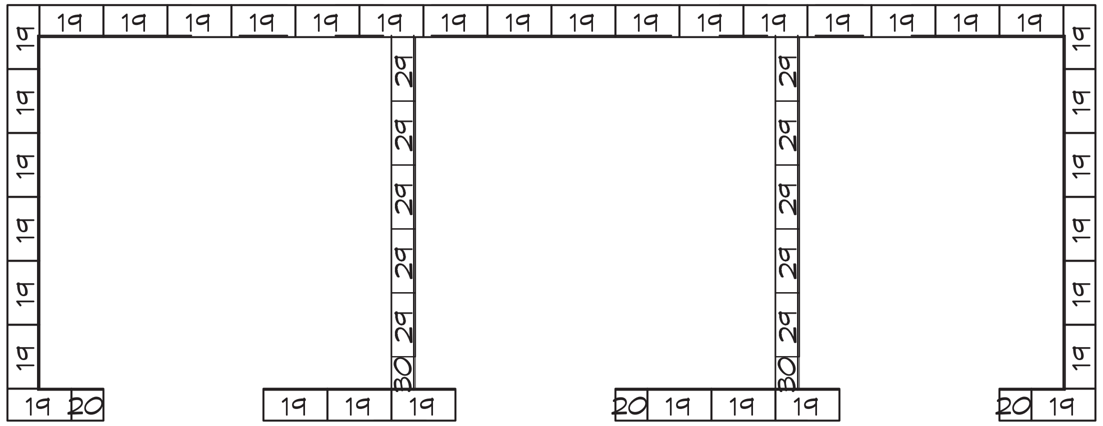

COURSE 8

DO
NOT
STAMP

Precision Structural Engineering, Inc.
www.structure1.com
Klamath Falls Office
250 Main Klamath Falls, Oregon 97603
Phone: (541) 850-6300 Fax: (541) 850-6233
info@structure1.com
ROMTEC216-7

ROMTEC
18240 NORTH BANK ROAD
ROSEBURG, OR 97470
(541)-496-3541 FAX (541)-496-0803

PROJECT: 1014 SST ASPEN STRETCH RESTROOM
POINT NO POINT LIGHTHOUSE RESTROOM
HANSVILLE, WASHINGTON

SHEET TITLE: BLOCK PLAN

PLAN SET# 18574
DATE: 04/13/2015

REVISIONS		
REV.	DATE:	BY

DRAWN BY: CR

SHEET NO.
B3

DO NOT STAMP

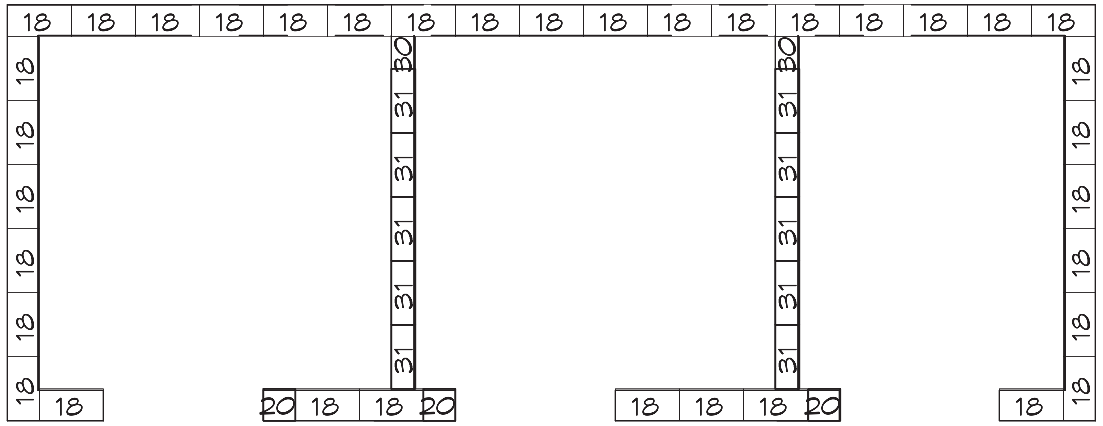

COURSE 9
BOND BEAM

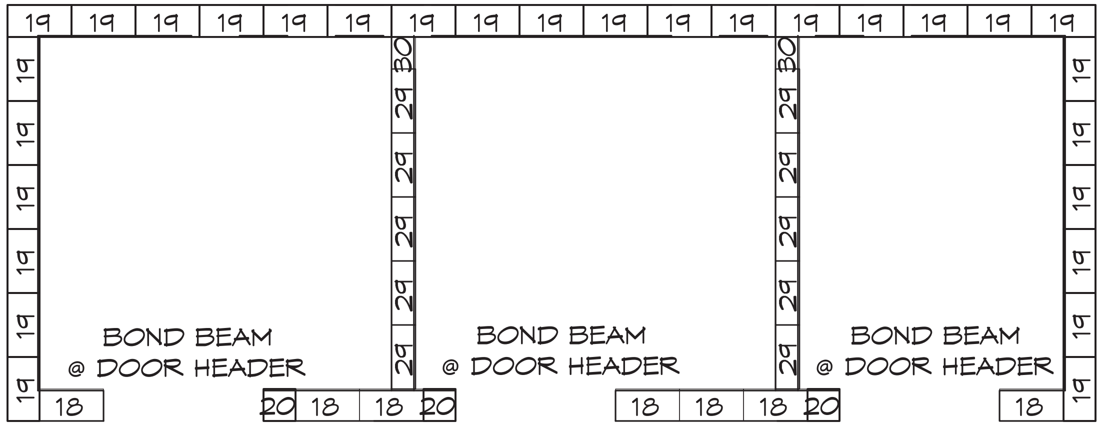

COURSE 11

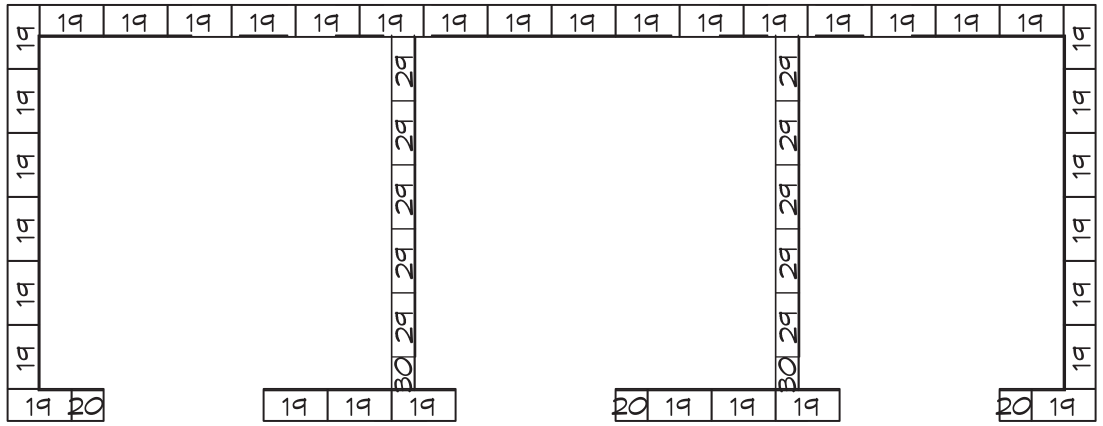

COURSE 10

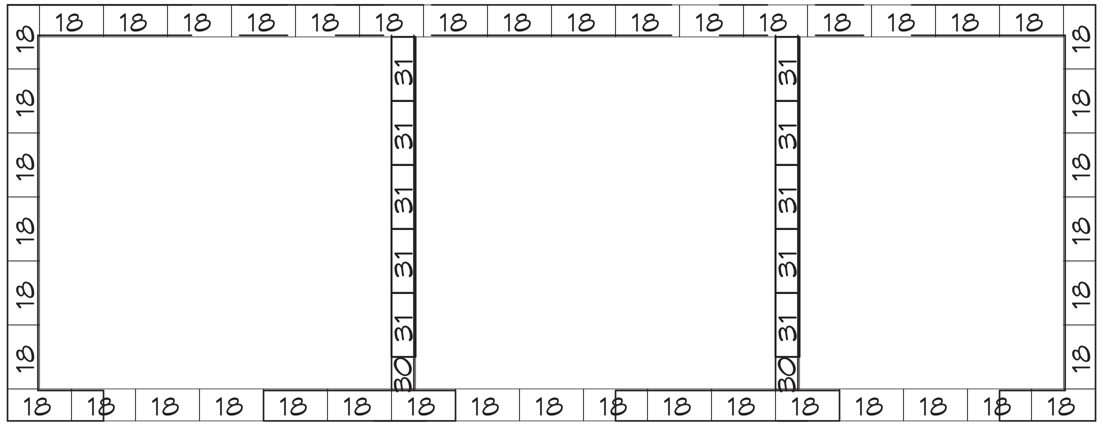

COURSE 12
BOND BEAM

PROJECT: 1014 SST ASPEN STRETCH RESTROOM
POINT NO POINT LIGHTHOUSE RESTROOM
HANSVILLE, WASHINGTON

SHEET TITLE: BLOCK PLAN

Precision Structural Engineering, Inc.
www.structure1.com
Klamath Falls Office
250 Main Klamath Falls, Oregon 97603
Phone: (541) 850-6300 Fax: (541) 850-6233
info@structure1.com
ROMTEC216-7

ROMTEC
18240 NORTH BANK ROAD
ROSEBURG, OR 97470
(541)-496-3541 FAX (541)-496-0803

PLAN SET# 18574
DATE: 04/13/2015

REVISIONS

REV.	DATE:	BY

DRAWN BY: CR

SHEET NO.
B4

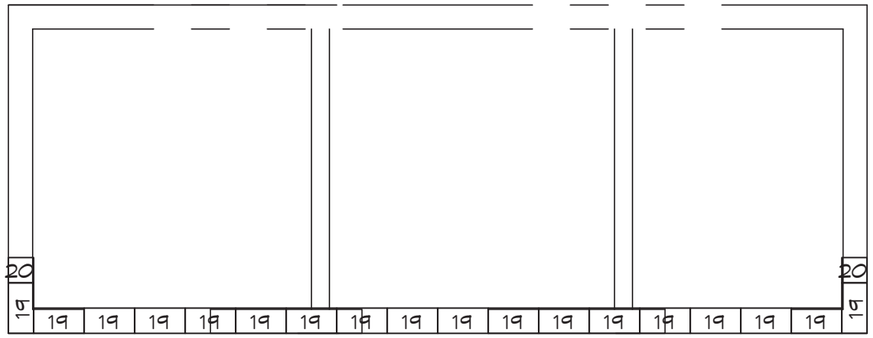

COURSE 13

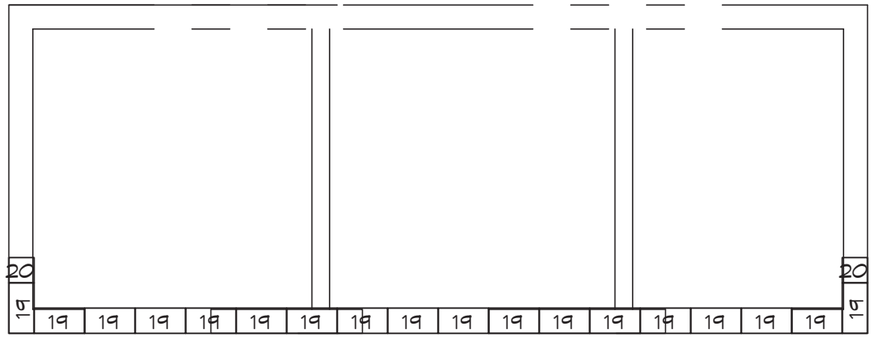

COURSE 15

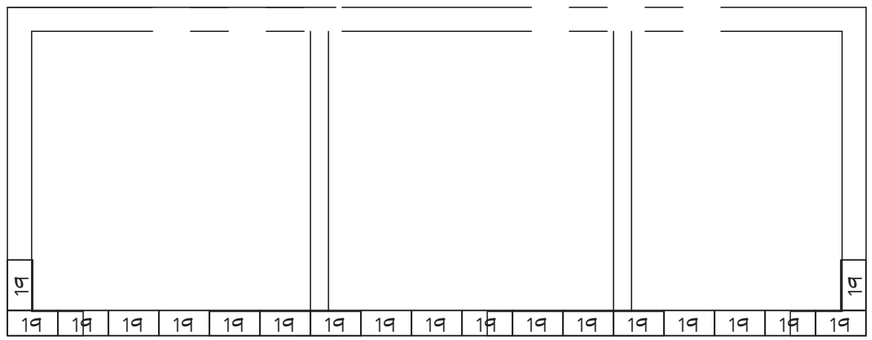

COURSE 14

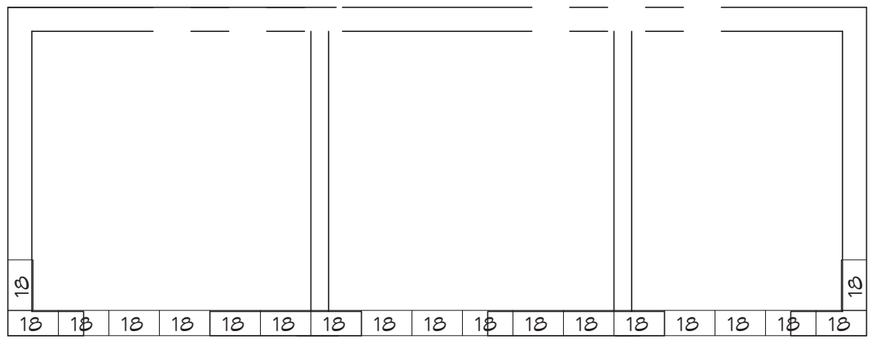

COURSE 16
BOND BEAM

DO NOT STAMP

Precision Structural Engineering, Inc.
www.structure1.com
Klamath Falls Office
250 Main Klamath Falls, Oregon 97603
Phone: (541) 850-8300 Fax: (541) 850-6233
info@structure1.com

ROMTEC

18240 NORTH BANK ROAD
ROSEBURG, OR 97470
(541)-496-3541 FAX (541)-496-0803

ROMTEC216-7

PROJECT: 1014 SST ASPEN STRETCH RESTROOM
POINT NO POINT LIGHTHOUSE RESTROOM
HANSVILLE, WASHINGTON

SHEET TITLE: BLOCK PLAN

PLAN SET# 18574

DATE: 04/13/2015

REVISIONS

REV.	DATE:	BY

DRAWN BY: CR

SHEET NO.
B5

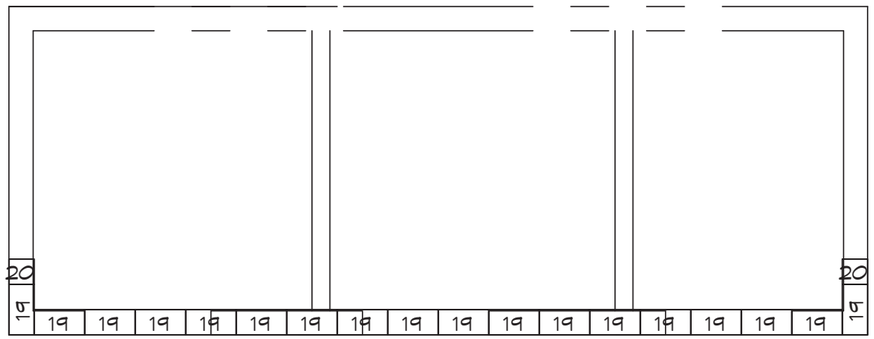

COURSE 17

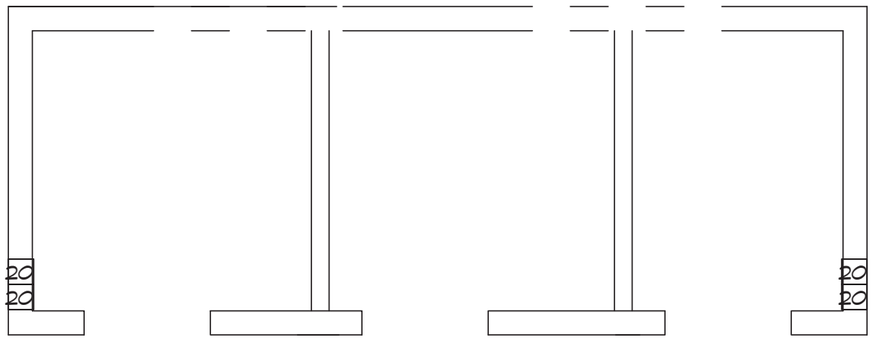

COURSE 19

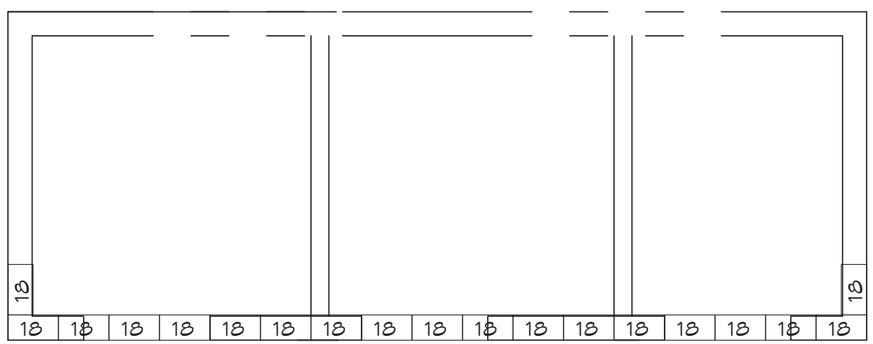

COURSE 18
BOND BEAM

DO NOT STAMP

Precision Structural Engineering, Inc.
www.structure1.com
Klamath Falls Office
250 Main Klamath Falls, Oregon 97603
Phone: (541) 850-8300 Fax: (541) 850-8233
info@structure1.com
ROMTEC216-7

ROMTEC
18240 NORTH BANK ROAD
ROSEBURG, OR 97470
(541)-496-3541 FAX (541)-496-0803

PROJECT: 1014 SST ASPEN STRETCH RESTROOM
POINT NO POINT LIGHTHOUSE RESTROOM
HANSVILLE, WASHINGTON

SHEET TITLE: BLOCK PLAN

PLAN SET# 18574

DATE: 04/13/2015

REVISIONS

REV.	DATE:	BY

DRAWN BY: CR

SHEET NO. B6

5.02 CALCULATIONS

If included in the proposal, structural calculations to follow once plans are sealed.

THIS PAGE INTENTIONALLY LEFT BLANK

Precision
Structural
Engineering, Inc.

STRUCTURAL ENGINEERING CALCULATIONS

PROJECT: Point No Point Lighthouse Restroom 18574

PROJECT LOCATION: Point No Point Rd. NE
Hansville, WA 98340

PSE PROJECT NUMBER: Romtec 216-7

DATE: March 3, 2016

BY: Nabil Taha, Ph.D., P.E.

3-3-16

NABIL M. TAHA
STATE OF WASHINGTON
41133
REGISTERED
PROFESSIONAL ENGINEER

EXPIRES 7-17

250-A Main Street
Klamath Falls, OR. 97601

E-Mail: info@structure1.com
Web: www.structure1.com

ph. (541) 850-6300
fax (541) 850-6233

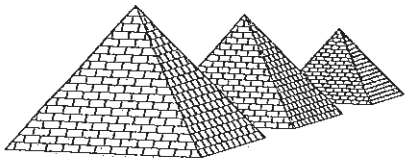

Precision Structural Engineering, Inc.

Table of Contents:

250-A Main Street
Klamath Falls, OR. 97601

E-Mail: info@structure1.com
Web: www.structure1.com

ph. (541) 850-6300
fax (541) 850-6233

Precision
Structural
Engineering, Inc.

References:

1- Literature:

a. 2012 International Building Code (IBC), with local amendments.

b. Design of Wood Structures, Donald E. Breyer 4th ED.

c. Masonry Designers' Guide, TMC 5th Edition

2- Software:

a. RISA 3D Version 13.0,
RISA Technologies
26212 Dimension Dr. Suite 200

b. RISA Foot Version 4.0,
RISA Technologies,
26212 Dimension Dr. Suite 200

c. Wood Works Design Office Version 10.0,
American Forest & Paper Association

250-A Main Street
Klamath Falls, OR. 97601

E-Mail: info@structure1.com
Web: www.structure1.com

ph. (541) 850-6300
fax (541) 850-6233

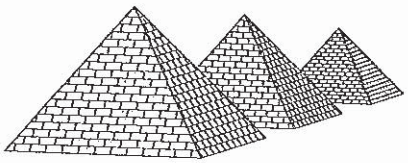

Precision Structural Engineering, Inc.

Design Criteria:

1- Location:	Point No Point Rd. NE Hansville, WA 96340 (Lat. 47° 54' 42" Long. 122° 31' 42")	
2- Seismic:	RC	II
	SDC	D
	Site Class	D
	S_S	1.282
	S_1	0.509
	S_{DS}	0.855
	S_{D1}	0.509
	I_E	1.0
	R	5
3- Wind:	Basic wind speed	110 mph (3s.gust)
	Exposure	D
	RC	II
4- Snow Load:	25 psf (flat roof)	
5- Soil Bearing Capacity:	1500 psf	
6- Gravity Loads:	DL Floor:	15 psf
	LL Floor:	40 psf
	DL Roof:	10 psf
	Exterior Walls:	81 psf
7- Deflection Criteria:	Floor LL Deflection:	L/480
	Roof TL Deflection:	L/180

**Other criteria assumed as stated in design calculations.

250-A Main Street
Klamath Falls, OR. 97601

E-Mail: info@structure1.com
Web: www.structure1.com

ph. (541) 850-6300
fax (541) 850-6233


Point No Point Lighthouse Restroom
47° 54' 42"
122° 31' 42"
625
Maxwelton
Bayview Ridge Rd
Puget Sound
Port Ludlow
e Twins
Hansville
Point No Point Lighthouse Restroom
Possession
Hood Head
Hood Canal Floating Bridge
Eglon
Port Gamble
Google earth
© 2016 Google
N
3 mi

USGS Design Maps Summary Report

User-Specified Input

Report Title	Point No Point Lighthouse Restroom Thu February 18, 2016 19:17:03 UTC
Building Code Reference Document	ASCE 7-10 Standard (which utilizes USGS hazard data available in 2008)
Site Coordinates	47.9117°N, 122.5282°W
Site Soil Classification	Site Class D – "Stiff Soil"
Risk Category	I/II/III

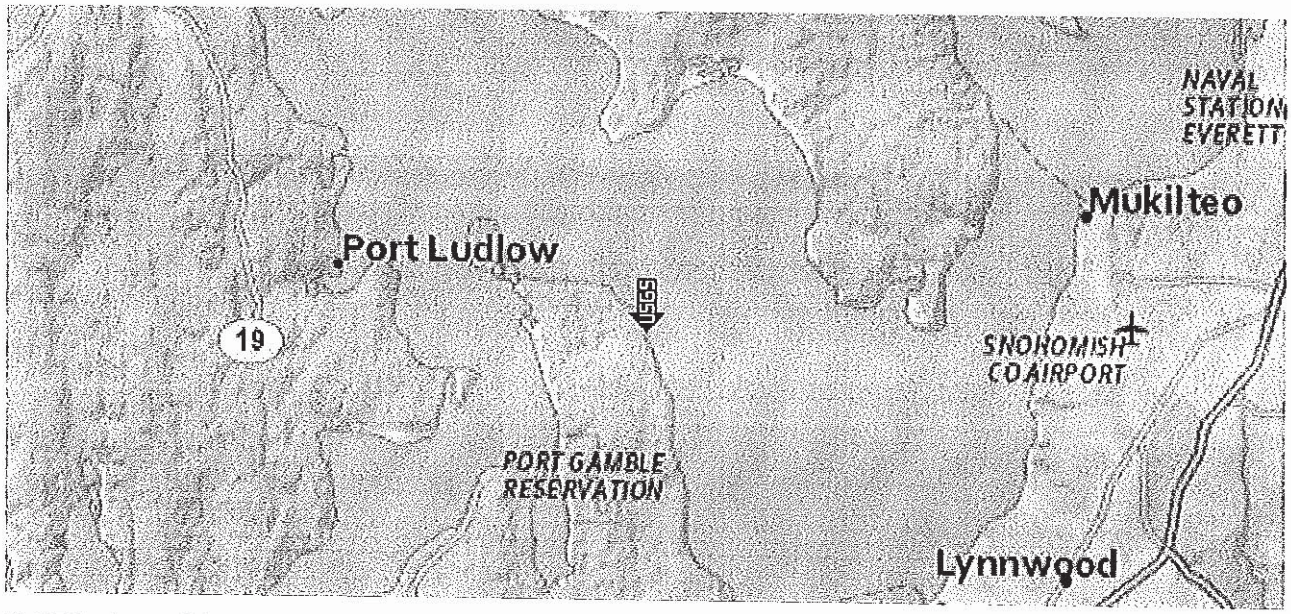

USGS-Provided Output

S_S =	1.282 g	S_{MS} =	1.282 g	S_{DS} =	0.855 g
S_1 =	0.509 g	S_{M1} =	0.763 g	S_{D1} =	0.509 g

For information on how the SS and S1 values above have been calculated from probabilistic (risk-targeted) and deterministic ground motions in the direction of maximum horizontal response, please return to the application and select the "2009 NEHRP" building code reference document.

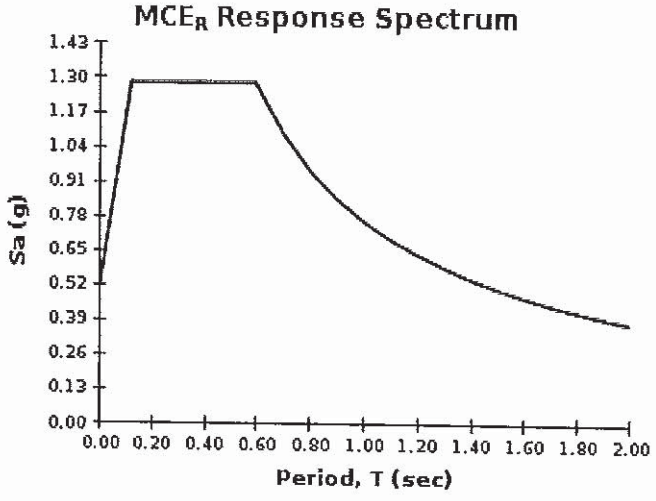

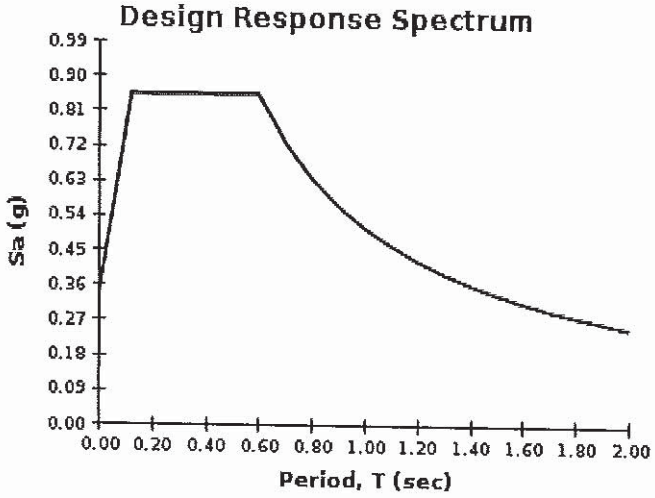

For PGA_M, T_L, C_{RS}, and C_{R1} values, please view the detailed report.

IBC SEISMIC DESIGN

EQUIVALENT LATERAL FORCE PROCEDURE

JOB NUMBER Romtec 216-7

DESIGNER RMH

Design Information

DATA	VALUE	SOURCE
S_1=	0.509	Seismic Design Parameters (Software)
S_{MS}=	1.282	Seismic Design Parameters (Software)
S_{M1}=	0.763	Seismic Design Parameters (Software)
I_E	1.0	ASCE 7-10 Table 1.5-2
Risk Category	2	ASCE 7-10 Table 1.5-1
R	5	ASCE 7-10 Table 12.2-1
h_n	13	Height per ASCE 7-10
C_t	0.02	ASCE 7-10 Table 12.8-2

S_{MS}: Max considered spectral response acceleration for short periods

S_{M1}: Max considered spectral response acceleration for 1-second period

I_E : Seismic importance factor

R: Response modification factor

1) Design spectral response acceleration

S_{DS}: 5% Damped spectral response acceleration at short periods

S_{D1}: 5% Damped spectral response acceleration at 1 second period

$S_{DS}=2/3(S_{ms})$ $S_{DS}=$ 2/3 X 1.282 $S_{DS}=$ 0.855 [IBC Eq. 16-39]

$S_{D1}=2/3(S_{m1})$ $S_{D1}=$ 2/3 X 0.763 $S_{D1}=$ 0.509 [IBC Eq. 16-40]

2) Seismic design category

From Table IBC 1613.3.5(1) : D

From Table IBC 1613.3.5(2) : D

Governing Design Category D

3) Determine design base shear (V)

Equivalent Force Procedure
[ASCE 7-10, 12.8.1] $V= C_s \times W$

C_s : Seismic Response Coefficient
W : Total dead load and other applicable loads

A. [ASCE 7-10, 12.8.1.1, Eq. 12.8-2]

$C_S = \frac{S_{DS}}{R/I}$ $C_S = \frac{0.855}{5} 1.0$ $C_S=$ 0.171

B. **Nor** greater than

$C_S = \frac{S_{D1}}{T(R/I)}$ [ASCE 7-10, 12.8.1.1, Eq. 12.8-3] $T = T_a = C_t(h_n^x)$ [ASCE 7-10, 12.8.2.1, Eq. 12.8-7]

$C_S = \frac{0.509 \text{ X } 1}{0.137 \text{ X } 5}$

$C_S=$ 0.743

T_a : Approximate Fundamental Period

$T= 0.020 \text{ X} 13^{0.75}$ $T=$ 0.137

C. **Nor** less than [ASCE 7-10, 12.8.1.1, Eq. 12.8-5]

$C_S = 0.044 (S_{DS}) (I)$ $C_S = 0.044 \text{ X } 0.855 \text{ X} 1$ $C_S=$ 0.0376

Governing C_s = 0.171

$V= Cs \times W$ $V = 0.171 \text{ X } W$ Refer to sheet two for W and Calculated V

IBC SEISMIC DESIGN

VERTICLE FORCE DISTRIBUTION EQUIVALENT LATERAL FORCE PROCEDURE

JOB NUMBER Romtec 216-7

DESIGNER RMH

1. Determine dead load at each level of building.

Structural portion		DL (PSF)	Area (SF)	Length (FT)	Height (FT)	Total Weight (LB)
a) Roof	Diaphram elevation from the base level in ft				8	
	Roof	10	525	NA	NA	5250
	Misc.	0	0	0	0	0
	Misc. (LBS)	0	NA	NA	NA	0
c) 5th floor	Diaphram elevation from the base level in ft				0	
	Ext. Walls	0	NA	0	0	0
	Int. Walls	0	NA	0	0	0
	Floor	0	0	NA	NA	0
	Misc.	0	0	0	0	0
	Misc. (LBS)	0	NA	NA	NA	0
d) 4th floor	Diaphram elevation from the base level in ft				0	
	Ext. Walls	0	NA	0	0	0
	Int. Walls	0	NA	0	0	0
	Floor	0	0	NA	NA	0
	Misc.	0	0	0	0	0
	Misc. (LBS)	0	NA	NA	NA	0
e) 3rd floor	Diaphram elevation from the base level in ft				0	
	Ext. Walls	0	NA	0	0	0
	Int. Walls	0	NA	0	0	0
	Floor	0	0	NA	NA	0
	Misc.	0	0	0	0	0
	Misc. (LBS)	0	NA	NA	NA	0
f) 2nd floor	Diaphram elevation from the base level in ft				0	
	Ext. Walls	0	NA	0	0	0
	Int. Walls	0	NA	0	0	0
	Floor	0	0	NA	NA	0
	Misc.	0	0	0	0	0
	Misc. (LBS)	0	NA	NA	NA	0
g) 1st floor	Ext. Walls	81	NA	75	8	48600
	Int. Walls	0	NA	0	0	0
	Misc.	0	0	0	0	0
					TOTAL DEAD LOAD (LB) =	53850

2) Determine verticle force distribution at each level ASCE 7-10 12.8-3

$F_x = C_{vx} \times V$ ASCE 7-10 Eq. 12.8-11

$$C_{vx} = \frac{w_x h_x^k}{\sum w_i h_i^k}$$ ASCE 7-10 Eq. 12.8-12

F_x: Lateral seismic force at any level

V: Seismic base shear (Kips)

w_x & w_i : The portion of the total gravity load of the structure (W) located or assigned to level i or x

h_x & h_x: The height (ft) from the base to level i or x diaphram.

k : An exponent related to the structures period (T) as follows;

$T \leq 0.5$ sec $k = 1$ $T \geq 2.5$ sec $k = 2$ $0.5 \leq T \leq 2.5$ Interpolate between 1 & 2

Refer to sheet one for V

V = 0.171 X W V = 0.171 X 53850 V= 9.205 (kips) T= 0.1369 k= 1

Level (floor)	Wall Height (ft)	Diaphram Height (Ft)	W_x (kips)	$W_x * h_x^k$	C_{vx}	F_x (kips)	Allowable F_x (kips)
Roof	8	8	29.550	236	1.000	9.21	6.58
5	0	0	0.000	0	0.000	0	0.00
4	0	0	0.000	0	0.000	0	0.00
3	0	0	0.000	0	0.000	0	0.00
2	0	0	0.000	0	0.000	0.00	0.00
			29.550	236	1.000	9.21	6.6

Note: The Total Shear shown in the right hand column is an "allowable" load.

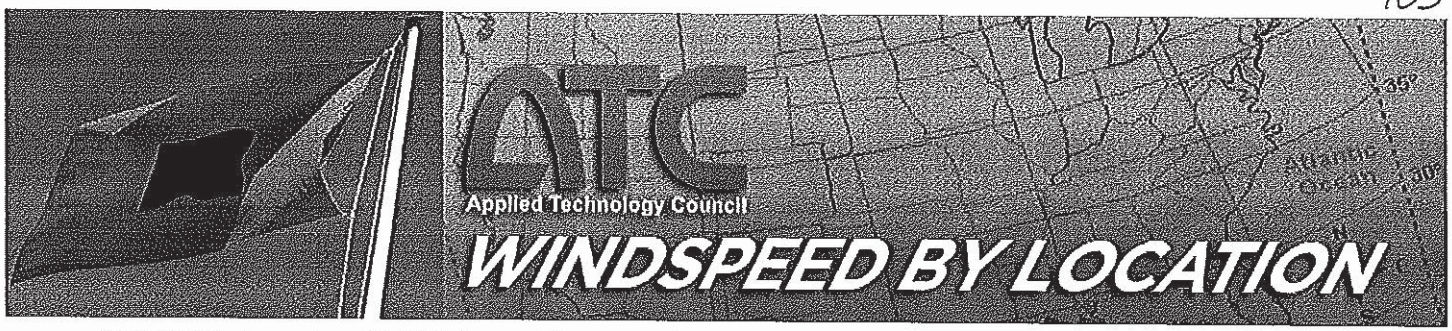

Search Results

Query Date: Thu Feb 18 2016
Latitude: 47.9117
Longitude: -122.5282

ASCE 7-10 Windspeeds (3-sec peak gust in mph*):

Risk Category I: 100
Risk Category II: 110
Risk Category III-IV: 115
MRI 10-Year:** 72
MRI 25-Year:** 79
MRI 50-Year:** 85
MRI 100-Year:** 91

ASCE 7-05 Windspeed:
85 (3-sec peak gust in mph)
ASCE 7-93 Windspeed:
70 (fastest mile in mph)

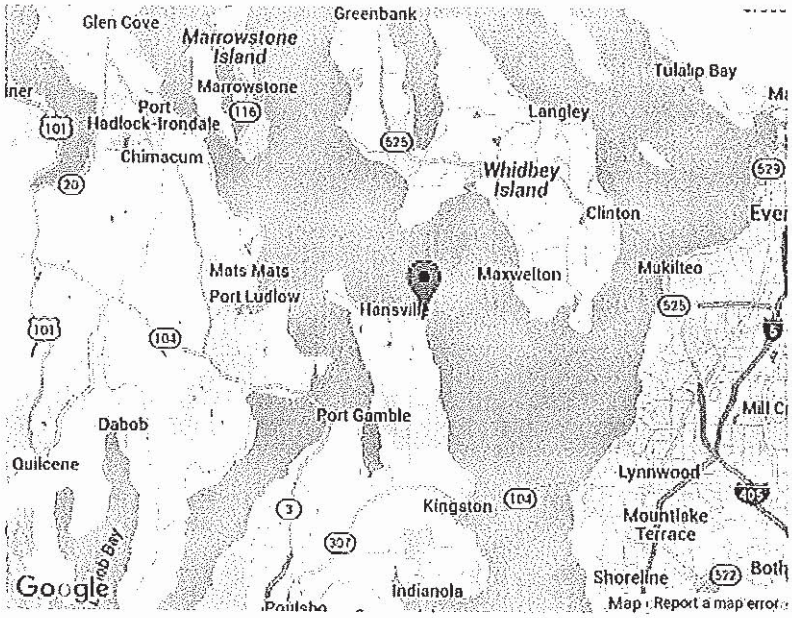

*Miles per hour
**Mean Recurrence Interval

Users should consult with local building officials to determine if there are community-specific wind speed requirements that govern.

Print your results

WINDSPEED WEBSITE DISCLAIMER

While the information presented on this website is believed to be correct, ATC and its sponsors and contributors assume no responsibility or liability for its accuracy. The material presented in the windspeed report should not be used or relied upon for any specific application without competent examination and verification of its accuracy, suitability and applicability by engineers or other licensed professionals. ATC does not intend that the use of this information replace the sound judgment of such competent professionals, having experience and knowledge in the field of practice, nor to substitute for the standard of care required of such professionals in interpreting and applying the results of the windspeed report provided by this website. Users of the information from this website assume all liability arising from such use. Use of the output of this website does not imply approval by the governing building code bodies responsible for building code approval and interpretation for the building site described by latitude/longitude location in the windspeed load report.

MecaWind Pro v2.2.7.0 per ASCE 7-10

Developed by MECA Enterprises, Inc. Copyright www.mecaenterprises.com

Date	: 2/18/2016	Project No.	: JobNo
Company Name	: True	Designed By	: Engineer
Address	: Address	Description	: Description
City	: City	Customer Name	: Customer
State	: State	Proj Location	: Location

File Location: C:\Users\Ralph.Hall\AppData\Roaming\MecaWind\Default.wnd

Input Parameters: Directional Procedure All Heights Building (Ch 27 Part 1)

Basic Wind Speed(V)	= 110.00 mph				
Structural Category	= II		Exposure Category	=	D
Natural Frequency	= N/A		Flexible Structure	=	No
Importance Factor	= 1.00		Kd Directional Factor	=	0.85
Alpha	= 11.50		Zg	=	700.00 ft
At	= 0.09		Bt	=	1.07
Am	= 0.11		Bm	=	0.80
Cc	= 0.15		l	=	650.00 ft
Epsilon	= 0.13		Zmin	=	7.00 ft
Pitch of Roof	= 6 : 12		Slope of Roof(Theta)	=	26.57 Deg
h: Mean Roof Ht	= 10.06 ft		Type of Roof	=	GABLED
RHt: Ridge Ht	= 12.13 ft		Eht: Eave Height	=	8.00 ft
OH: Roof Overhang at Eave	= 1.00 ft		Overhead Type	=	Overhang
Bldg Length Along Ridge	= 22.70 ft		Bldg Width Across Ridge	=	16.50 ft

Gust Factor Calculations

Gust Factor Category I Rigid Structures - Simplified Method

Gust1: For Rigid Structures (Nat. Freq.>1 Hz) use 0.85 = 0.85

Gust Factor Category II Rigid Structures - Complete Analysis

Zm: 0.6*Ht	=	7.00 ft
lzm: Cc*(33/Zm)^0.167	=	0.19
Lzm: l*(Zm/33)^Epsilon	=	535.47 ft
Q: (1/(1+0.63*((B+Ht)/Lzm)^0.63))^0.5	=	0.96
Gust2: 0.925*((1+1.7*lzm*3.4*Q)/(1+1.7*3.4*lzm))	=	0.90

Gust Factor Summary

Not a Flexible Structure use the Lessor of Gust1 or Gust2 = 0.85

Table 26.11-1 Internal Pressure Coefficients for Buildings, GCpi

GCPi : Internal Pressure Coefficient = +/-0.18

Wind Pressurs Main Wind Force Resisting System (MWFRS) - Ref Figure 27.4-1

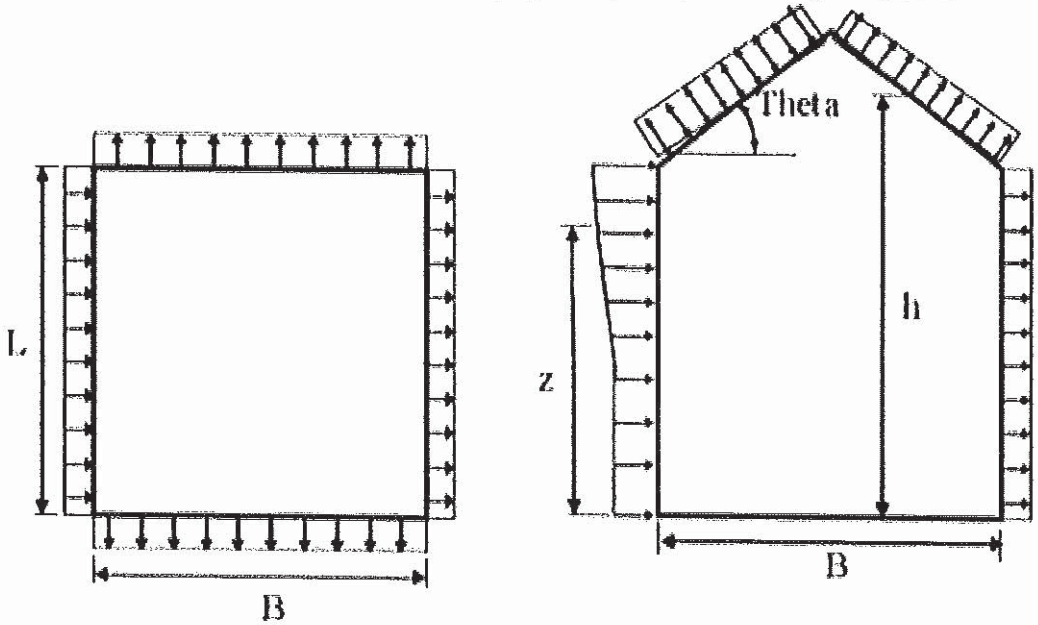

Kh: 2.01*(Ht/Zg)^(2/Alpha) = 1.03

Kht: Topographic Factor (Figure 6-4)	=	1.00
Qh: .00256*(V)^2*I*Kh*Kht*Kd	=	16.28 psf
Cpww: Windward Wall Cp(Ref Fig 6-6)	=	0.80
Roof Area	=	418.76 ft^2
Reduction Factor based on Roof Area	=	0.88

MWFRS-Wall Pressures for Wind Normal to 22.7 ft Wall (Normal to Ridge)
All pressures shown are based upon ASD Design, with a Load Factor of .6

Wall	Cp	Pressure +GCpi (psf)	Pressure -GCpi (psf)
Leeward Wall	-0.50	-9.85	-3.99
Side Walls	-0.70	-12.61	-6.75

Wall	Elev ft	Kz	Kzt	Cp	qz psf	Press +GCpi	Press -GCpi	Total +/-GCpi
Windward	8.00	1.03	1.00	0.80	16.28	8.14	14.00	17.98

Roof Location	Cp	Pressure +GCpi (psf)	Pressure -GCpi (psf)
Windward - Min Cp	-0.31	-7.22	-1.36
Windward - Max Cp	0.17	-0.58	5.28
Leeward Norm to Ridge	-0.60	-11.23	-5.37
Overhang Top (Windward)	-0.31	-4.29	-4.29
Overhang Top (Leeward)	-0.60	-8.30	-8.30
Overhang Bot (Windward only)	0.80	11.07	11.07

→ 10.7

Notes - Normal to Ridge
Note (1) Per Fig 27.4-1 Note 7, Since Theta > 10 Deg base calcs on Mean Ht
Note (2) Wall & Roof Pressures = Qh*(G*Cp - GCPi)
Note (3) +GCpi = Positive Internal Bldg Press, -GCPi = Negative Internal Bldg Press
Note (4) Total Pressure = Leeward Press + Windward Press (For + or - GCPi)
Note (5) Ref Fig 27.4-1, Normal to Ridge (Theta>=10), Theta= 26.6 Deg, h/l= 0.44
Note (6) No internal pressure considered (GCpi = 0) for Overhang
Note (7) Overhang bottom based upon windward wall Cp and GCpi = 0.
Note (8) X= Along Building ridge, Y = Normal to Building Ridge, Z = Vertical
Note (9) MIN = Minimum pressures on Walls = 9.6 psf and Roof = 4.8 psf
Note (10) Area* = Area of the surface projected onto a vertical plane normal to wind.

MWFRS-Wall Pressures for Wind Normal to 16.5 ft wall (Along Ridge)
All pressures shown are based upon ASD Design, with a Load Factor of .6

Wall	Cp	Pressure +GCpi (psf)	Pressure -GCpi (psf)
Leeward Wall	-0.42	-8.81	-2.95
Side Walls	-0.70	-12.61	-6.75

Wall	Elev ft	Kz	Kzt	Cp	qz psf	Press +GCpi	Press -GCpi	Total +/-GCpi
Windward	12.13	1.03	1.00	0.80	16.28	8.14	14.00	16.94
Windward	8.00	1.03	1.00	0.80	16.28	8.14	14.00	16.94

Roof - Dist from Windward Edge	Cp	Pressure +GCpi (psf)	Pressure -GCpi (psf)
Roof: 0.0 ft to 5.0 ft	-0.90	-15.38	-9.52
Roof: 5.0 ft to 10.1 ft	-0.90	-15.38	-9.52
Roof: 10.1 ft to 20.1 ft	-0.50	-9.85	-3.99
Roof: 20.1 ft to 22.7 ft	-0.30	-7.08	-1.22
OH Top : 0.0 ft to 5.0 ft	-0.90	-18.31	-18.31
Overhang Top : 5.0 ft to 10.1 ft	-0.90	-18.31	-18.31
Overhang Top : 10.1 ft to 20.1 ft	-0.50	-12.78	-12.78
Overhang Top : 20.1 ft to 22.7 ft	-0.30	-10.01	-10.01

Notes - Along Ridge
Note (1) OH = Overhang, no internal pressure considered for Overhang (GCpi=0)
Note (2) Ref Fig 27.4-1, Parallel to Ridge (All), h/l= 0.44
Note (3) X= Along Building ridge, Y = Normal to Building Ridge, Z = Vertical
Note (4) MIN = Minimum pressures on Walls = 9.6 psf and Roof = 4.8 psf
Note (5) Area* = Area of the surface projected onto a vertical plane normal to wind.

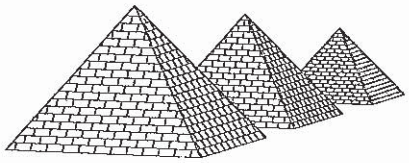

Precision Structural Engineering, Inc.

ROOF FRAMING ANALYSIS & DESIGN:

Pages 1,000 - 1,999

250-A Main Street
Klamath Falls, OR. 97601

E-Mail: info@structure1.com
Web: www.structure1.com

ph. (541) 850-6300
fax (541) 850-6233

Precision Structural Engineering, Inc.
250 Main Street, Suite A • Klamath Falls, OR 97601
Tel (541) 850-6300 • FAX (541) 850-6233

Medford Office
836 Mason Way (off Sage Road) • Medford, OR 97501
Tel (541) 858-8500

www.structure1.com • Email: info@structure1.com

PROJECT NO. Romtec 216-7 SHEET 1000 OF

PROJECT NAME Point No Point Restroom DESIGNED BY RH DATE

SUBJECT Roof 18574 CHECKED BY DATE

Roof Decking

DL = 10 psf
SL = 25 psf

Spacing = 6" o.c.

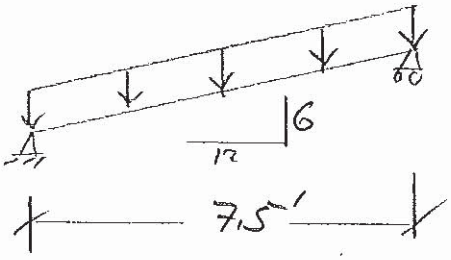

USE [2×6 DF-L #2 T&G]

Porch Beam

DL = 10 psf
SL = 25 psf

Trib = 5 ft

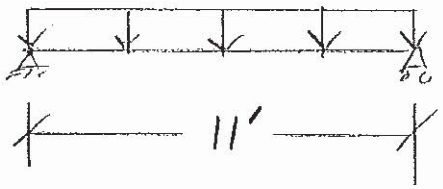

USE [5⅛×6 Glu-Lam 24F-1.7E]

WoodWorks® SOFTWARE FOR WOOD DESIGN	COMPANY	PROJECT
	Feb. 18, 2016 13:28	Roof Decking

Design Check Calculation Sheet

WoodWorks Sizer 10.4

Loads:

Load	Type	Distribution	Pat-tern	Location [ft] Start	End	Magnitude Start	End	Unit
Load1	Dead	Full Area				10.00(6.0")		psf
Load2	Snow	Full Area				25.00(6.0")		psf
Self-weight	Dead	Full UDL				2.1		plf

Load magnitude does not include Normal Importance factor from Table 4.2.3.2, which is applied during analysis.

Maximum Reactions (lbs), Bearing Capacities (lbs) and Bearing Lengths (in) :

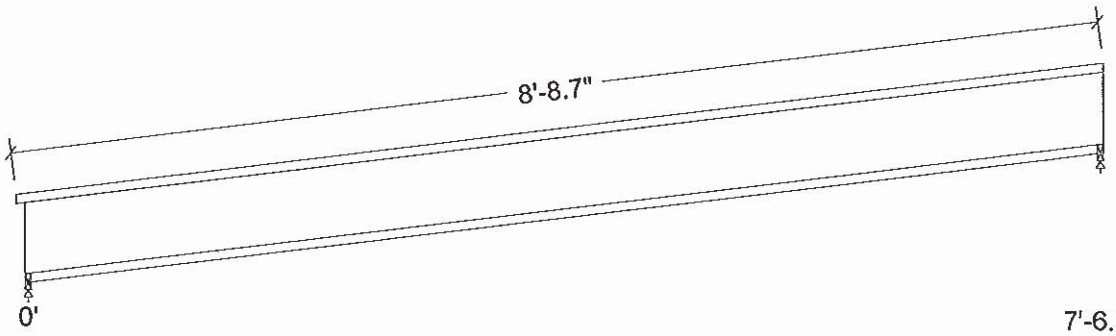

Unfactored:			
Dead	30		30
Snow	47		47
Factored:			
Total	78		78
Bearing:			
F'theta	713		713
Capacity			
Joist	2142		2142
Support	1878		1878
Anal/Des			
Joist	0.04		0.04
Support	0.04		0.04
Load comb	#2		#2
Length	0.50*		0.50*
Min req'd	0.50*		0.50*
Cb	1.00		1.00
Cb min	1.00		1.00
Cb support	1.00		1.00
Fcp sup	625		625

*Minimum bearing length setting used: 1/2" for end supports

Lumber-soft, D.Fir-L, No.2, 1-1/2"x6"

Supports: All - Timber-soft Beam, D.Fir-L No.2

Roof joist spaced at 6" c/c; Total length: 8'-8.7"; volume = 0.5 cu.ft.; Pitch: 6/12;

Lateral support: top= full, bottom= full; Oblique angle: 90.0 deg; Repetitive factor: applied where permitted (refer to online help);

WARNING: this CUSTOM SIZE is not in the database. Refer to online help.

Analysis vs. Allowable Stress and Deflection using NDS 2012 :

Criterion		Analysis Value	Design Value	Unit	Analysis/Design
Shear	x-x	fv = 0	Fv' = 207	kips	fv/Fv' = 0.00
	y-y	fv = 11	Fv' = 207	psi	fv/Fv' = 0.05
Bending(+)	x-x	fb = 0	Fb' = 1428	kip-ft	fb/Fb' = 0.00
	y-y	fb = 775	Fb' = 1369	kip-ft	fb/Fb' = 0.57
Live Defl'n		0.42 = L/240	0.56 = L/180	in	0.75
Total Defl'n		0.82 = L/122	0.84 = L/120	in	0.98

Additional Data:

FACTORS:	F/E(psi)	CD	CM	Ct	CL	CF	Cfu	Cr	Cfrt	Ci	Cn	LC#
Fvy'	180	1.15	1.00	1.00	-	-	-	-	1.00	1.00	-	2
Fby'	900	1.15	1.00	1.00	1.000	1.000	1.15	1.15	1.00	1.00	-	2
Fcp'	625	-	1.00	1.00	-	-	-	-	1.00	1.00	-	-
E'	1.6 million		1.00	1.00	-	-	-	-	1.00	1.00	-	2
Emin'	0.58 million		1.00	1.00	-	-	-	-	1.00	1.00	-	2

CRITICAL LOAD COMBINATIONS:

```
Shear      : LC #2  = D+S, V =     69, V design =     67 lbs
Bending(+): LC #2  = D+S, M =    146 lbs-ft
Deflection: LC #2  = D+S  (live)
            LC #2  = D+S  (total)
```

D=dead L=live S=snow W=wind I=impact Lr=roof live Lc=concentrated E=earthquake

All LC's are listed in the Analysis output

Load combinations: ASCE 7-10 / IBC 2012

CALCULATIONS:

Deflection: EI = 43.4e06 lb-in2 EIy = 2.70e06 lb-in2

"Live" deflection = Deflection from all non-dead loads (live, wind, snow...)

Total Deflection = 1.50(Dead Load Deflection) + Live Load Deflection.

Bearing: Allowable bearing at an angle F'theta calculated for each support as per NDS 3.10.3

Design Notes:

1. WoodWorks analysis and design are in accordance with the ICC International Building Code (IBC 2012), the National Design Specification (NDS 2012), and NDS Design Supplement.
2. Please verify that the default deflection limits are appropriate for your application.
3. Sawn lumber bending members shall be laterally supported according to the provisions of NDS Clause 4.4.1.
4. SLOPED BEAMS: level bearing is required for all sloped beams.

WoodWorks® SOFTWARE FOR WOOD DESIGN	COMPANY	PROJECT
	Feb. 18, 2016 13:29	Porch Beam

Design Check Calculation Sheet

WoodWorks Sizer 10.4

Loads:

Load	Type	Distribution	Pat-tern	Location [ft] Start	End	Magnitude Start	End	Unit
Load1	Dead	Full Area				10.00(5.00')		psf
Load2	Snow	Full Area				25.00(5.00')		psf
Self-weight	Dead	Full UDL				6.0		plf

Load magnitude does not include Normal Importance factor from Table 4.2.3.2, which is applied during analysis.

Maximum Reactions (lbs), Bearing Capacities (lbs) and Bearing Lengths (in) :

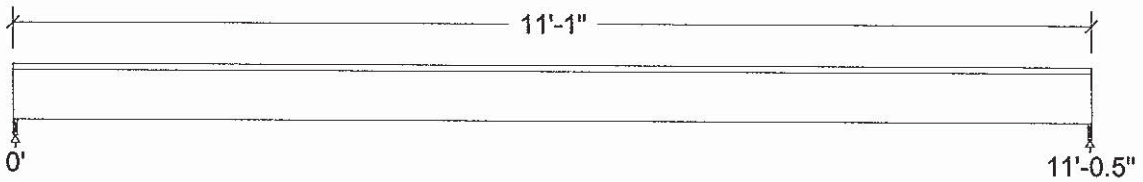

Unfactored:			
Dead	310		310
Snow	693		693
Factored:			
Total	1003		1003
Bearing:			
Capacity			
Beam	1281		1281
Support	1719		1719
Anal/Des			
Beam	0.78		0.78
Support	0.58		0.58
Load comb	#2		#2
Length	0.50*		0.50*
Min req'd	0.50*		0.50*
Cb	1.00		1.00
Cb min	1.00		1.00
Cb support	1.07		1.07
Fcp sup	625		625

*Minimum bearing length setting used: 1/2" for end supports

Glulam-Unbal., West Species, 24F-1.7E WS, 5-1/8"x6"

4 laminations, 5-1/8" maximum width,
Supports: All - Timber-soft Beam, D.Fir-L No.2
Total length: 11'-1.0"; volume = 2.4 cu.ft.;
Lateral support: top= full, bottom= at supports;

Analysis vs. Allowable Stress and Deflection using NDS 2012 :

Criterion	Analysis Value	Design Value	Unit	Analysis/Design
Shear	fv = 44	Fv' = 241	psi	fv/Fv' = 0.18
Bending(+)	fb = 1076	Fb' = 2760	psi	fb/Fb' = 0.39
Live Defl'n	0.27 = L/497	0.74 = L/180	in	0.36
Total Defl'n	0.45 = L/297	1.10 = L/120	in	0.40

Additional Data:

FACTORS:	F/E(psi)	CD	CM	Ct	CL	CV	Cfu	Cr	Cfrt	Notes	Cn*Cvr	LC#
Fv'	210	1.15	1.00	1.00	-	-	-	-	1.00	1.00	1.00	2
Fb'+	2400	1.15	1.00	1.00	1.000	1.000	1.00	1.00	1.00	1.00	-	2
Fcp'	500	-	1.00	1.00	-	-	-	-	1.00	-	-	-
E'	1.7 million		1.00	1.00	-	-	-	-	1.00	-	-	2
Eminy'	0.69 million		1.00	1.00	-	-	-	-	1.00	-	-	2

CRITICAL LOAD COMBINATIONS:

```
Shear     : LC #2  = D+S, V =    999, V design =    905 lbs
Bending(+): LC #2  = D+S, M =   2758 lbs-ft
Deflection: LC #2  = D+S  (live)
            LC #2  = D+S  (total)
D=dead L=live S=snow W=wind I=impact Lr=roof live Lc=concentrated E=earthquake
All LC's are listed in the Analysis output
Load combinations: ASCE 7-10 / IBC 2012
```

CALCULATIONS:

```
Deflection:  EI =    157e06 lb-in2
"Live" deflection = Deflection from all non-dead loads (live, wind, snow…)
Total Deflection = 1.50(Dead Load Deflection) + Live Load Deflection.
```

Design Notes:

1. WoodWorks analysis and design are in accordance with the ICC International Building Code (IBC 2012), the National Design Specification (NDS 2012), and NDS Design Supplement.
2. Please verify that the default deflection limits are appropriate for your application.
3. Glulam design values are for materials conforming to ANSI 117-2010 and manufactured in accordance with ANSI A190.1-2007
4. GLULAM: bxd = actual breadth x actual depth.
5. Glulam Beams shall be laterally supported according to the provisions of NDS Clause 3.3.3.
6. GLULAM: bearing length based on smaller of Fcp(tension), Fcp(comp'n).

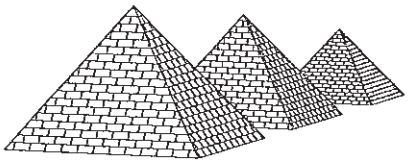

Precision Structural Engineering, Inc.

FIRST FLOOR FRAMING / FOUNDATION ANALYSIS & DESIGN:

Pages 2,000 - 2,999

250-A Main Street
Klamath Falls, OR. 97601

E-Mail: info@structure1.com
Web: www.structure1.com

ph. (541) 850-6300
fax (541) 850-6233

Precision Structural Engineering, Inc.
250 Main Street, Suite A • Klamath Falls, OR 97601
Tel (541) 850-8300 • FAX (541) 850-8233

Medford Office
836 Mason Way (off Sage Road) • Medford, OR 97501
Tel (541) 858-8500

www.structure1.com • Email: info@structure1.com

PROJECT NO. Romtec 216-7 SHEET 2000 OF

PROJECT NAME Point No Point Restroom DESIGNED BY RH DATE

SUBJECT Floor 18574 CHECKED BY DATE

Masonry Bearing Wall

P: DL = 10 psf × 8 ft. = 80 plf
SL = 25 psf × 8 ft. = 200 plf

L: ~pg. 30 11
WL = 24.5 psf

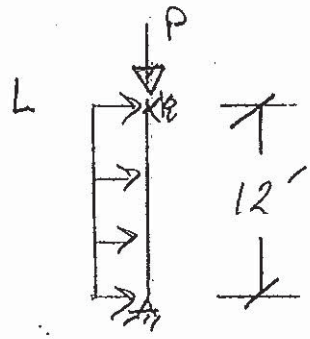

USE [6" CMU w/ #4 @ 32" o.c. vert. bars]

Continuous Wall Footing

DL = 10 psf × 8 ft. = 80 plf
SL = 25 psf × 8 ft. = 200 plf

Wall DL = 81 psf × 12 ft. = 972 plf

USE [12" w × 24" D Footing w/ 2 - #5 B-rs]

2001

PROJECT : Point No Point Restroom 18574 PAGE :
CLIENT : Romtec DESIGN BY : RMH
JOB NO. : Romtec 216-7 DATE : REVIEW BY :

Allowable Stress Design of Masonry Bearing Wall Based on TMS 402-11 / 2012 IBC

INPUT DATA & DESIGN SUMMARY

SPECIAL INSPECTION (0=NO, 1=YES)			1	Yes	
TYPE OF MASONRY (1=CMU, 2=BRICK)			1	CMU	
MASONRY STRENGTH	f_m'	=	1.5	ksi	
REBAR YIELD STRESS	f_y	=	60	ksi	
ALLOWABLE INCREASING ? (IBC/CBC 1605.3.2)			Yes		
SERVICE GRAVITY LOAD	P	=	280	lbs / ft	
SERVICE LATERAL LOAD	w_1	=	0	plf / ft	
SERVICE PARAPET LOAD	w_2	=	24.5	plf / ft	
THICKNESS OF WALL	t	=	6	in	
PARAPET HEIGHT	h_p	=	0	ft	
WALL HEIGHT	h	=	12	ft	
ECCENTRICITY	e	=	0	in	
MASONRY SPECIFIC WEIGHT	γ_m	=	125	pcf	
WALL HORIZ. REINF.	1	#	4	@	32 in o.c. (at middle)
WALL VERT. REINF.	1	#	4	@	32 in o.c. (at middle)

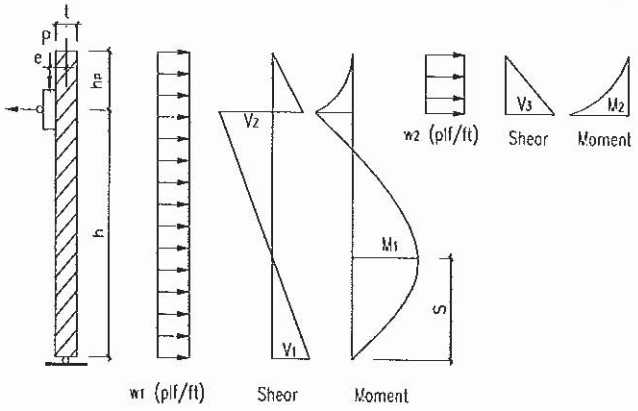

[THE WALL DESIGN IS ADEQUATE.]

ANALYSIS

VERT. REINF. AREA AT EACH SIDE	A_s	=	0.08	in^2
EFFECTIVE DEPTH (TMS 1.15.3.5)	d	=	2.82	in
WIDTH OF SECTION	b_w	=	12.00	in
EFFECTIVE THICKNESS	t_e	=	5.63	in
MASONRY ELASTICITY MODULUS	E_m	=	1350	ksi
STEEL ELASTICITY MODULUS	E_s	=	29000	ksi

THE ALLOWABLE STRESS DUE TO FLEXURE IS

$$F_b = (SF)\left(0.33 f_m'\right) = \quad 660 \quad \text{psi}$$

THE DISTANCE FROM BOTTOM TO M_1 IS

$$S = h + h_p - \left[\frac{(h+h_p)^2}{2h} - \frac{Pe}{h w_1}\right] = 12.0 \quad \text{ft}$$

THE GOVERNING SHEAR FORCES ARE

$$V_1 = (h+h_p)w_1 - \frac{(h+h_p)^2 w_1}{2h} + \frac{Pe}{h} = 0 \quad \text{lbs / ft}$$

$$V_2 = h w_1 - V_1 = 0 \quad \text{lbs / ft}$$

$$V_3 = h_p w_2 = 0 \quad \text{lbs / ft}$$

MODULAR RATIO	n	=	21.48	
REINFORCEMENT RATIO	ρ	=	0.0022	
ALLOWABLE STRESS FACTOR	SF	=	1.333	

THE NEUTRAL AXIS DEPTH FACTOR IS

$$k = \sqrt{2\rho n + (\rho n)^2} - \rho n = 0.26482$$

THE ALLOWABLE REINF. STRESS DUE TO FLEXURE IS

$$F_s = (1.33 \ or \ 1.0)(20) \ or \ 32 = \quad 32000 \ \text{psi}$$

THE GOVERNING MOMENTS AND AXIAL FORCES ARE

$$M_1 = \frac{1.05}{2 w_1 h^2}\left[Pe + \frac{w_1}{2}\left(h^2 - h_p^2\right)\right]^2 = 0 \quad \text{ft-lbs/ft}$$

$$P_1 = P + (wall \ \ weight) = 280 \quad \text{lbs / ft}$$

$$M_2 = \frac{w_2 h_p^2}{2} = 0 \quad \text{ft-lbs/ft}$$

$$P_2 = P + (wall \ \ weight) = 280 \quad \text{lbs / ft}$$

THE GOVERNING SHEAR STRESS IN MASONRY IS

$$f_v = \frac{MAX(V_1, V_2, V_3)}{t_e b_w} = 0.00 \quad \text{psi}$$

DETERMINE THE REGION FOR FLEXURE AND AXIAL LOAD (MDG-3 Tab 12.2.1, Fig 12.2-12 & 13, page 12-25).

$$\frac{M}{Pd} \le \frac{t_e}{6d} \qquad \frac{M}{Pd} \le \left(\frac{t_e}{2d} - \frac{1}{3}\right) \qquad \frac{M}{Pd} > \left(\frac{t_e}{2d} - \frac{1}{3}\right)$$

1. Wall is in compression and not cracked.
2. Wall is cracked but steel is in compression.
3. Wall is cracked and steel is in tension.

REGION 1 APPLICABLE FOR (M1, P1)
REGION 1 APPLICABLE FOR (M2, P2)

(cont'd)

CHECK REGION 1 CAPACITY

$$M_m = \frac{b_w t_e^2}{6} F_b - P\frac{t_e}{6} = \begin{cases} 3465 \text{ ft-lbs / ft} > M_1 & \text{[Satisfactory]} \\ 3465 \text{ ft-lbs / ft} > M_2 & \text{[Satisfactory]} \end{cases}$$

CHECK REGION 2 CAPACITY

$$M_m = P\frac{t_e}{2} - \frac{2P^2}{3b_w F_b} = \begin{cases} 65 \text{ ft-lbs / ft} > M1 & \text{[Not applicable]} \\ 65 \text{ ft-lbs / ft} > M2 & \text{[Not applicable]} \end{cases}$$

CHECK REGION 3 CAPACITY (The moment maybe limited by either the masonry compression or steel tension, MDG-3 page 12-25).

$$M_m = MIN\left[\frac{1}{2} b_w kd\, F_b\left(d - \frac{kd}{3}\right) - P\left(d - \frac{t_e}{2}\right) \;,\; A_s F_s\left(d - \frac{kd}{3}\right) + P\left(\frac{t_e}{2} - \frac{kd}{3}\right)\right]$$

$$= \begin{cases} 573 \text{ ft-lbs / ft} > M_1 & \text{[Not applicable]} \\ 573 \text{ ft-lbs / ft} > M_2 & \text{[Not applicable]} \end{cases}$$

THE ALLOWABLE SHEAR STRESS IS GIVEN BY (TMS 402 2.3.6)

$$F_v = (SF)1.125\left(\sqrt{f'_m}\right) = 58.095 \text{ psi} > f_v \quad \text{[Satisfactory]}$$

Technical References:

1. "Masonry Designers' Guide, Third Edition" (MDG-3), The Masonry Society, 2001.

2003

Company : **Precision Structural Engineering, Inc.** February 18, 2016
Designer : **RMH**
Job Number : **Romtec 216-7** **Continuous Wall Footing** Checked By:_____

Sketch

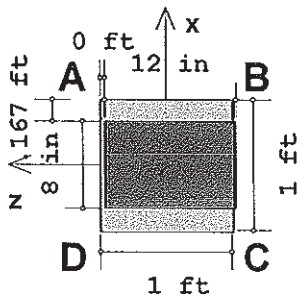

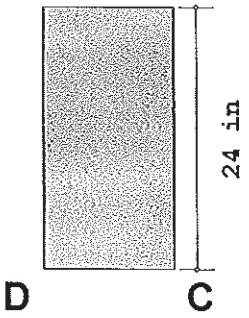

Details

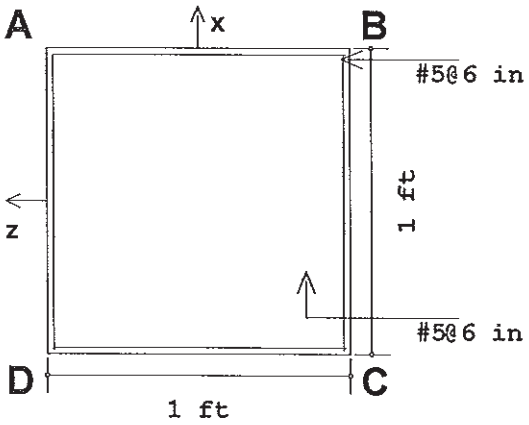

Bottom Rebar Plan

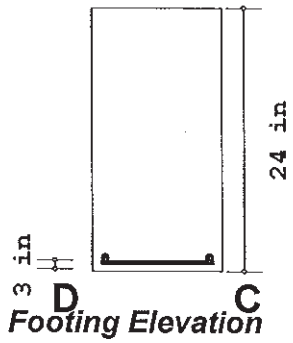

Footing Elevation

Geometry, Materials and Criteria

Length	:1 ft	eX	:0 in	Net Allowable Bearing	:1500 psf (net)	Steel fy	:60 ksi
Width	:1 ft	eZ	:0 in	Concrete Weight	:150 pcf	Minimum Steel	:.0018
Thickness	:24 in	pX	:8 in	Concrete f'c	:2.5 ksi	Maximum Steel	:.0075
Height	:0 in	pZ	:12 in	Design Code	:ACI 318-11		

Footing Top Bar Cover	:3 in	Overturning / Sliding SF	:1.5	Phi for Flexure	:0.9
Footing Bottom Bar Cover	:3 in	Coefficient of Friction	:0.3	Phi for Shear	:0.75
Pedestal Longitudinal Bar Cover	:1.5 in	Passive Resistance of Soil	:0 k	Phi for Bearing	:0.65

Loads

	P (k)	Vx (k)	Vz (k)	Mx (k-ft)	Mz (k-ft)	Overburden (psf)
DL	1.052					100
SL	.2					

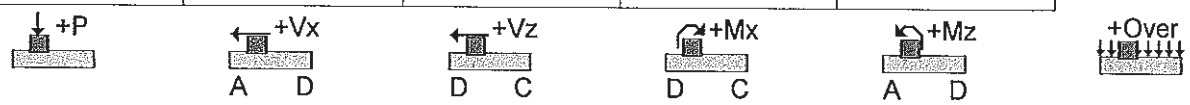

Soil Bearing

Description	Categories and Factors	Gross Allow.(psf)	Max Bearing (psf)	Max/Allowable Ratio
ASCE ASD 1	1DL	1900	1452 (A)	.764
ASCE ASD 2	1DL+1LL	1900	1452 (A)	.764
ASCE ASD 3 (b)	1DL+1SL	1900	1652 (A)	.869
ASCE ASD 4 (b)	1DL+.75LL+.75SL	1900	1602 (A)	.843

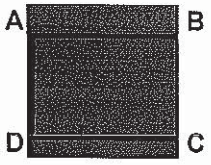

1DL
QA: 1452 psf
QB: 1452 psf
QC: 1452 psf
QD: 1452 psf
NAZ:-1 in
NAX:-1 in

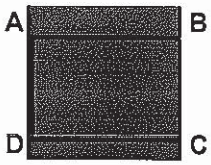

1DL+1LL
QA: 1452 psf
QB: 1452 psf
QC: 1452 psf
QD: 1452 psf
NAZ:-1 in
NAX:-1 in

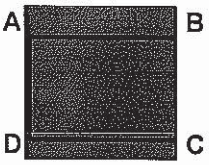

1DL+1SL
QA: 1652 psf
QB: 1652 psf
QC: 1652 psf
QD: 1652 psf
NAZ:-1 in
NAX:-1 in

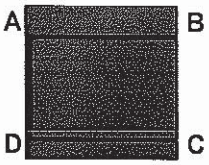

1DL+.75LL+.75SL
QA: 1602 psf
QB: 1602 psf
QC: 1602 psf
QD: 1602 psf
NAZ:-1 in
NAX:-1 in

Footing Flexure Design (Bottom Bars)

As-min x-dir (Top Flexure): .815 in^2
As-min z-dir (Top Flexure): .815 in^2
As-min x-dir (Bot Flexure): .815 in^2
As-min z-dir (Bot Flexure): .815 in^2

As-min x-dir (T & S): .518 in^2
As-min z-dir (T & S): .518 in^2

Description	Categories and Factors	Mu-xx UC Max	Mu-xx (k-ft)	z-Dir As Required (in^2)	z-Dir As Provided (in^2)	Mu-zz UC Max	Mu-zz (k-ft)	x-Dir As Required (in^2)	x-Dir As Provided (in^2)
ACI 9-1	1.4DL	0	0	0	.614	.00038	.02	0	.614
ACI 9-2 (a)	1.2DL+1.6LL	0	0	0	.614	.00032	.02	0	.614
ACI 9-2 (b)	1.2DL+1.6LL+.5SL	0	0	0	.614	.00035	.02	0	.614
ACI 9-3 (b)	1.2DL+1.6SL+1LL	0	0	0	.614	.00041	.02	0	.614

Footing Shear Check

Two Way (Punching) Vc: NA One Way (x Dir. Cut) Vc 24.45 k One Way (z Dir. Cut) Vc: 24.45 k

Description	Categories and Factors	Punching Vu(k)	Punching Vu/øVc	x Dir. Cut Vu(k)	x Dir. Cut Vu/øVc	z Dir. Cut Vu(k)	z Dir. Cut Vu/øVc
ACI 9-1	1.4DL	NA	NA	.0007364	0	.0007364	0
ACI 9-2 (a)	1.2DL+1.6LL	NA	NA	.0006312	0	.0006312	0
ACI 9-2 (b)	1.2DL+1.6LL+.5SL	NA	NA	.0006812	0	.0006812	0
ACI 9-3 (b)	1.2DL+1.6SL+1LL	NA	NA	.0007912	0	.0007912	0

Concrete Bearing Check (Vertical Loads Only)

Bearing Bc : 204 k

Description	Categories and Factors	Bearing Bu (k)	Bearing Bu/øBc
ACI 9-1	1.4DL	1.473	.011
ACI 9-2 (a)	1.2DL+1.6LL	1.262	.01
ACI 9-2 (b)	1.2DL+1.6LL+.5SL	1.362	.01
ACI 9-3 (b)	1.2DL+1.6SL+1LL	1.582	.012

Overturning Check (Service)

Description	Categories and Factors	Mo-xx (k-ft)	Ms-xx (k-ft)	Mo-zz (k-ft)	Ms-zz (k-ft)	OSF-xx	OSF-zz
ASCE ASD 1	1DL	0	.726	0	.726	NA	NA
ASCE ASD 2	1DL+1LL	0	.726	0	.726	NA	NA
ASCE ASD 3 (b)	1DL+1SL	0	.826	0	.826	NA	NA
ASCE ASD 4 (b)	1DL+.75LL+.75SL	0	.801	0	.801	NA	NA

Mo-xx: Governing Overturning Moment about AD or BC
Ms-xx: Governing Stablizing Moment about AD or BC
OSF-xx: Ratio of Ms-xx to Mo-xx

Sliding Check (Service)

Description	Categories and Factors	Va-xx (k)	Vr-xx (k)	Va-zz (k)	Vr-zz (k)	SR-xx	SR-zz
ASCE ASD 1	1DL	0	.416	0	.416	NA	NA
ASCE ASD 2	1DL+1LL	0	.416	0	.416	NA	NA
ASCE ASD 3 (b)	1DL+1SL	0	.476	0	.476	NA	NA
ASCE ASD 4 (b)	1DL+.75LL+.75SL	0	.461	0	.461	NA	NA

Va-xx: Applied Lateral Force to Cause Sliding Along xx Axis
Vr-xx: Resisting Lateral Force Against Sliding Along xx Axis
SR-xx: Ratio of Vr-xx to Va-xx

Precision Structural Engineering, Inc.
250 Main Street, Suite A • Klamath Falls, OR 97601
Tel (541) 850-6300 • FAX (541) 850-6233

Medford Office
836 Mason Way (off Sage Road) • Medford, OR 97501
Tel (541) 858-8500

www.structure1.com • Email: info@structure1.com

PROJECT NO. Rontec 216-7 SHEET 2010 OF _____

PROJECT NAME Point No Point Restroom DESIGNED BY RH DATE _____

SUBJECT Floor CHECKED BY _____ DATE _____

Porch Posts

P: ~pg. 1003

DL = 310 × 2 = 620 lb.
SL = 693 × 2 = 1386 lb.

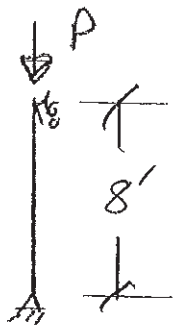

USE [6×6 DF-L #2]

Porch Footings

P: ~pg. 2010

DL = 620 lb.
SL = 1386 lb

USE [24" × 24" × 12" Footing w/ 3 - #4 Bars]

2011

WoodWorks® SOFTWARE FOR WOOD DESIGN	COMPANY	PROJECT
	Feb. 18, 2016 14:14	Porch Posts

Design Check Calculation Sheet

WoodWorks Sizer 10.4

Loads:

Load	Type	Distribution	Pat-tern	Location [ft] Start	End	Magnitude Start	End	Unit
Load1	Dead	Axial		(Ecc. = 0.92")		620		lbs
Load3	Snow	Axial		(Ecc. = 0.92")		1386		lbs
Self-weight	Dead	Axial				57		lbs

Load magnitude does not include Normal Importance factor from Table 4.2.3.2, which is applied during analysis.

Lateral Reactions (lbs):

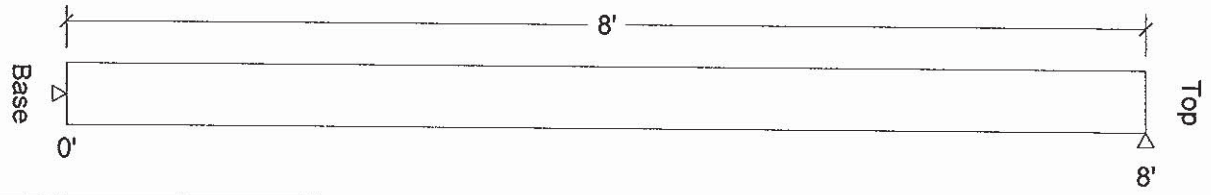

Unfactored:			
Dead	6		-6
Snow	13		-13
Factored:			
R->L			19
Load comb			#2
L->R	19		
Load comb	#2		#1

Timber-soft, D.Fir-L, No.2, 6x6 (5-1/2"x5-1/2")

Support: Non-wood

Total length: 8'; volume = 1.7 cu.ft.; Post and timber;

Pinned base; Load face = width(b); Ke x Lb: 1.0 x 8.0 = 8.0 [ft]; Ke x Ld: 1.0 x 8.0 = 8.0 [ft];

Analysis vs. Allowable Stress and Deflection using NDS 2012 :

Criterion	Analysis Value	Design Value	Unit	Analysis/Design
Shear	fv = 1	Fv' = 195	psi	fv/Fv' = 0.00
Bending(+)	fb = 66	Fb' = 862	psi	fb/Fb' = 0.08
Axial	fc = 68	Fc' = 661	psi	fc/Fc' = 0.10
Combined (axial + eccentric moment)				Eq.15.4-3 = 0.09
Axial Bearing	fc = 68	Fc* = 805	psi	fc/Fc* = 0.08
Live Defl'n	0.01 = <L/999	0.53 = L/180	in	0.01
Total Defl'n	0.01 = <L/999	0.53 = L/180	in	0.02

Additional Data:

FACTORS:	F/E(psi)	CD	CM	Ct	CL/CP	CF	Cfu	Cr	Cfrt	Ci	LC#
Fv'	170	1.15	1.00	1.00	-	-	-	-	1.00	1.00	2
Fb'+	750	1.15	1.00	1.00	1.000	1.000	1.00	1.00	1.00	1.00	2
Fc'	700	1.15	1.00	1.00	0.821	1.000	-	-	1.00	1.00	2
E'	1.3 million		1.00	1.00	-	-	-	-	1.00	1.00	2
Emin'	0.47 million		1.00	1.00	-	-	-	-	1.00	1.00	2
Fc*	700	1.15	1.00	1.00	-	1.000	-	-	1.00	1.00	2

CRITICAL LOAD COMBINATIONS:

```
Shear     : LC #2  = D+S, V =     19, V design =     19 lbs
Bending(+): LC #2  = D+S, M =    153 lbs-ft
Deflection: LC #2  = D+S  (live)
            LC #2  = D+S  (total)
Axial     : LC #2  = D+S,  P =  2063 lbs
Eq.15.4-3 : LC #2  = D+S   Fb'=  862
            FcE= 1268     Pxe/S=fc(6xe/d)=   66
D=dead L=live S=snow W=wind I=impact Lr=roof live Lc=concentrated E=earthquake
All LC's are listed in the Analysis output
Load combinations: ASCE 7-10 / IBC 2012
```

CALCULATIONS:

```
Deflection:  EI =   99.1e06 lb-in2
"Live" deflection = Deflection from all non-dead loads (live, wind, snow…)
Total Deflection = 1.50(Dead Load Deflection) + Live Load Deflection.
```

Design Notes:

1. WoodWorks analysis and design are in accordance with the ICC International Building Code (IBC 2012), the National Design Specification (NDS 2012), and NDS Design Supplement.
2. Please verify that the default deflection limits are appropriate for your application.
3. Axial load eccentricity applied in direction of load face only. It is the designers responsibility to check for effect of eccentricity in the other direction.

2013

Company : **Precision Structural Engineering, Inc.**
Designer : **RMH**
Job Number : **Romtec 216-7**

Porch Footing

February 18, 2016
Checked By:_____

Sketch

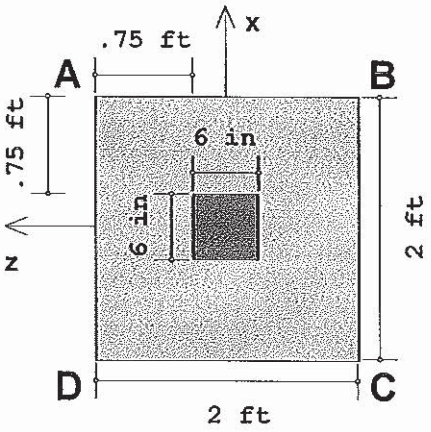

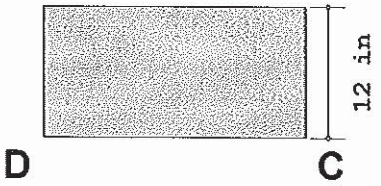

Details

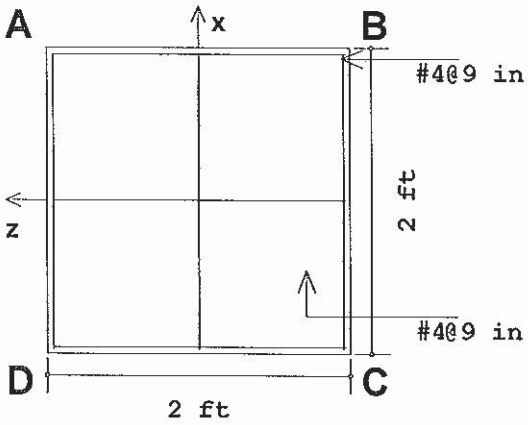

Bottom Rebar Plan

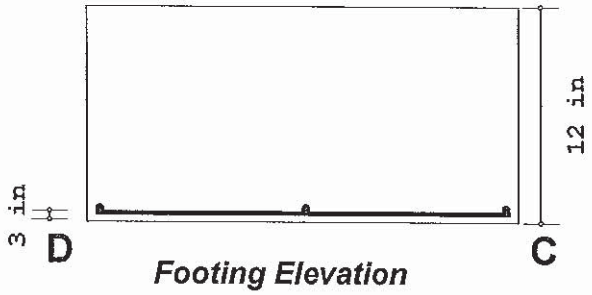

Footing Elevation

Geometry, Materials and Criteria

Length	: **2 ft**	eX	: **0 in**	Gross Allow. Bearing	: **1500 psf (gross)**	Steel fy	: **60 ksi**
Width	: **2 ft**	eZ	: **0 in**	Concrete Weight	: **150 pcf**	Minimum Steel	: **.0018**
Thickness	: **12 in**	pX	: **6 in**	Concrete f'c	: **2.5 ksi**	Maximum Steel	: **.0075**
Height	: **0 in**	pZ	: **6 in**	Design Code	: **ACI 318-11**		

Footing Top Bar Cover	: **3 in**	Overturning / Sliding SF	: **1.5**	Phi for Flexure	: **0.9**
Footing Bottom Bar Cover	: **3 in**	Coefficient of Friction	: **0.3**	Phi for Shear	: **0.75**
Pedestal Longitudinal Bar Cover	: **1.5 in**	Passive Resistance of Soil	: **0 k**	Phi for Bearing	: **0.65**

Loads

	P (k)	Vx (k)	Vz (k)	Mx (k-ft)	Mz (k-ft)	Overburden (psf)
DL	**.62**					**100**
SL	**1.386**					

Soil Bearing

Description	Categories and Factors	Gross Allow.(psf)	Max Bearing (psf)	Max/Allowable Ratio
ASCE ASD 1	1DL	1500	405 (A)	.27
ASCE ASD 2	1DL+1LL	1500	405 (A)	.27
ASCE ASD 3 (b)	1DL+1SL	1500	751.5 (A)	.501
ASCE ASD 4 (b)	1DL+.75LL+.75SL	1500	664.875 (A)	.443

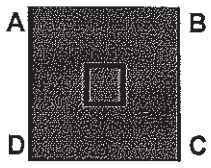

1DL
QA: 405 psf
QB: 405 psf
QC: 405 psf
QD: 405 psf
NAZ: -1 in
NAX: -1 in

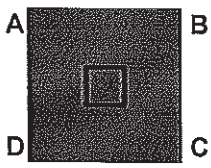

1DL+1LL
QA: 405 psf
QB: 405 psf
QC: 405 psf
QD: 405 psf
NAZ: -1 in
NAX: -1 in

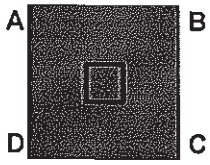

1DL+1SL
QA: 751.5 psf
QB: 751.5 psf
QC: 751.5 psf
QD: 751.5 psf
NAZ: -1 in
NAX: -1 in

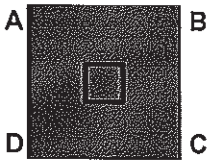

1DL+.75LL+.75SL
QA: 664.875 psf
QB: 664.875 psf
QC: 664.875 psf
QD: 664.875 psf
NAZ: -1 in
NAX: -1 in

Footing Flexure Design (Bottom Bars)

As-min x-dir (Top Flexure): .68 in^2
As-min z-dir (Top Flexure): .68 in^2
As-min x-dir (Bot Flexure): .68 in^2
As-min z-dir (Bot Flexure): .68 in^2

As-min x-dir (T & S): .518 in^2
As-min z-dir (T & S): .518 in^2

Description	Categories and Factors	Mu-xx UC Max	Mu-xx (k-ft)	z-Dir As Required (in^2)	z-Dir As Provided (in^2)	Mu-zz UC Max	Mu-zz (k-ft)	x-Dir As Required (in^2)	x-Dir As Provided (in^2)
ACI 9-1	1.4DL	.00565	.12	.003	.589	.00565	.12	.003	.589
ACI 9-2 (a)	1.2DL+1.6LL	.00484	.1	.003	.589	.00484	.1	.003	.589
ACI 9-2 (b)	1.2DL+1.6LL+.5SL	.00935	.2	.005	.589	.00935	.2	.005	.589
ACI 9-3 (b)	1.2DL+1.6SL+1LL	.01927	.42	.011	.589	.01927	.42	.011	.589

Footing Shear Check

Two Way (Punching) Vc: 98.6 k One Way (x Dir. Cut) Vc 20.4 k One Way (z Dir. Cut) Vc: 20.4 k

Description	Categories and Factors	Punching Vu(k)	Punching Vu/øVc	x Dir. Cut Vu(k)	x Dir. Cut Vu/øVc	z Dir. Cut Vu(k)	z Dir. Cut Vu/øVc
ACI 9-1	1.4DL	.551	.007	.018	.001	.018	.001
ACI 9-2 (a)	1.2DL+1.6LL	.472	.006	.016	.001	.016	.001
ACI 9-2 (b)	1.2DL+1.6LL+.5SL	.912	.012	.03	.002	.03	.002
ACI 9-3 (b)	1.2DL+1.6SL+1LL	1.881	.025	.062	.004	.062	.004

Concrete Bearing Check (Vertical Loads Only)

Bearing Bc : 153 k

Description	Categories and Factors	Bearing Bu (k)	Bearing Bu/ØBc
ACI 9-1	1.4DL	.868	.009
ACI 9-2 (a)	1.2DL+1.6LL	.744	.007
ACI 9-2 (b)	1.2DL+1.6LL+.5SL	1.437	.014
ACI 9-3 (b)	1.2DL+1.6SL+1LL	2.962	.03

Overturning Check (Service)

Description	Categories and Factors	Mo-xx (k-ft)	Ms-xx (k-ft)	Mo-zz (k-ft)	Ms-zz (k-ft)	OSF-xx	OSF-zz
ASCE ASD 1	1DL	0	1.62	0	1.62	NA	NA
ASCE ASD 2	1DL+1LL	0	1.62	0	1.62	NA	NA
ASCE ASD 3 (b)	1DL+1SL	0	3.006	0	3.006	NA	NA
ASCE ASD 4 (b)	1DL+.75LL+.75SL	0	2.659	0	2.659	NA	NA

Mo-xx: Governing Overturning Moment about AD or BC
Ms-xx: Governing Stablizing Moment about AD or BC
OSF-xx: Ratio of Ms-xx to Mo-xx

Sliding Check (Service)

Description	Categories and Factors	Va-xx (k)	Vr-xx (k)	Va-zz (k)	Vr-zz (k)	SR-xx	SR-zz
ASCE ASD 1	1DL	0	.478	0	.478	NA	NA
ASCE ASD 2	1DL+1LL	0	.478	0	.478	NA	NA
ASCE ASD 3 (b)	1DL+1SL	0	.894	0	.894	NA	NA
ASCE ASD 4 (b)	1DL+.75LL+.75SL	0	.79	0	.79	NA	NA

Va-xx: Applied Lateral Force to Cause Sliding Along xx Axis
Vr-xx: Resisting Lateral Force Against Sliding Along xx Axis
SR-xx: Ratio of Vr-xx to Va-xx

Precision Structural Engineering, Inc.
250 Main Street, Suite A • Klamath Falls, OR 97601
Tel (541) 850-6300 • FAX (541) 850-6233

Medford Office
836 Mason Way (off Sage Road) • Medford, OR 97501
Tel (541) 858-8500

www.structure1.com • Email: info@structure1.com

PROJECT NO. Rontec 216-7 SHEET 2020 OF _____

PROJECT NAME Point No Point Restroom DESIGNED BY RH DATE _____

SUBJECT Foundation 18574 CHECKED BY _____ DATE _____

Footing @ Vault

Roof: DL = 10 psf × 5 ft × 3 ft. = 150 lb.
SL = 25 psf × 5 ft × 3 ft. = 375 lb.

Wall DL = 81 psf × 8 ft × 3 ft. = 1944 lb.

~floor: DL = 50 psf × 4 ft × 3 ft. = 600 lb.
LL = 40 psf × 4 ft × 3 ft. = 480 lb

Tank DL = 750 Gal. × 8.34 lb/gal. = 6255 lb.

USE [36" × 36" × 10" Footing w/ 4-#4 Bars]

2021

Company : **Precision Structural Engineering, Inc.**
Designer : **RMH**
Job Number : **Romtec 216-7**

Vault Footing

February 18, 2016
Checked By:_____

Sketch

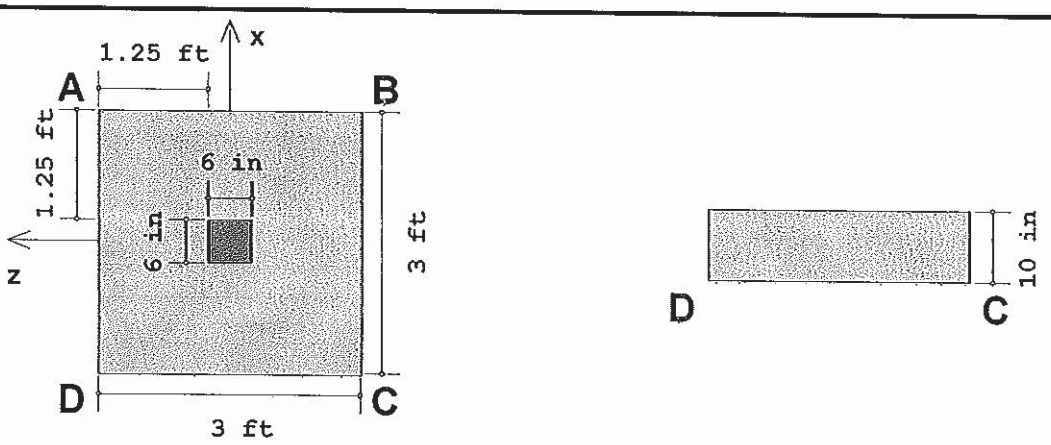

Details

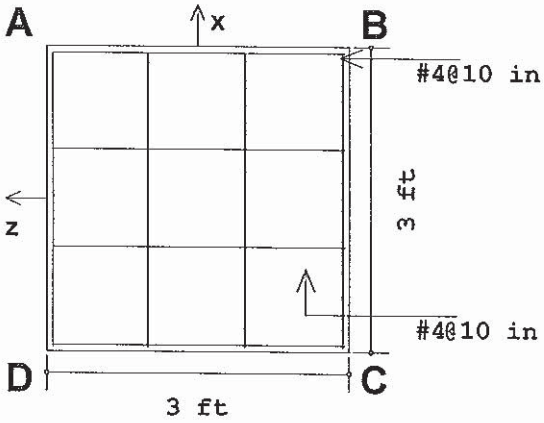

Bottom Rebar Plan

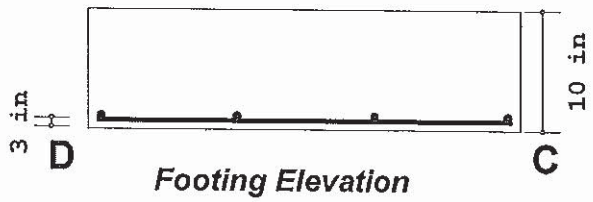

Footing Elevation

Geometry, Materials and Criteria

Length	: 3 ft	eX	: 0 in	Gross Allow. Bearing	: 1500 psf (gross)	Steel fy	: 60 ksi
Width	: 3 ft	eZ	: 0 in	Concrete Weight	: 150 pcf	Minimum Steel	: .0018
Thickness	: 10 in	pX	: 6 in	Concrete f'c	: 2.5 ksi	Maximum Steel	: .0075
Height	: 0 in	pZ	: 6 in	Design Code	: ACI 318-11		

Footing Top Bar Cover	: 3 in	Overturning / Sliding SF	: 1.5	Phi for Flexure	: 0.9
Footing Bottom Bar Cover	: 3 in	Coefficient of Friction	: 0.3	Phi for Shear	: 0.75
Pedestal Longitudinal Bar Cover	: 1.5 in	Passive Resistance of Soil	: 0 k	Phi for Bearing	: 0.65

Loads

	P (k)	Vx (k)	Vz (k)	Mx (k-ft)	Mz (k-ft)	Overburden (psf)
DL	8.949					100
LL	.48					
SL	.375					

Soil Bearing

Description	Categories and Factors	Gross Allow.(psf)	Max Bearing (psf)	Max/Allowable Ratio
ASCE ASD 1	1DL	1500	1219.33 (A)	.813
ASCE ASD 2	1DL+1LL	1500	1272.67 (A)	.848
ASCE ASD 3 (b)	1DL+1SL	1500	1261 (A)	.841
ASCE ASD 4 (b)	1DL+.75LL+.75SL	1500	1290.58 (A)	.86

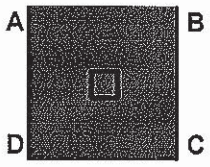

1DL
QA: 1219.33 psf
QB: 1219.33 psf
QC: 1219.33 psf
QD: 1219.33 psf
NAZ: -1 in
NAX: -1 in

1DL+1LL
QA: 1272.67 psf
QB: 1272.67 psf
QC: 1272.67 psf
QD: 1272.67 psf
NAZ: -1 in
NAX: -1 in

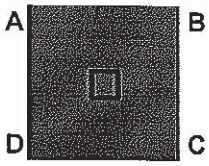

1DL+1SL
QA: 1261 psf
QB: 1261 psf
QC: 1261 psf
QD: 1261 psf
NAZ: -1 in
NAX: -1 in

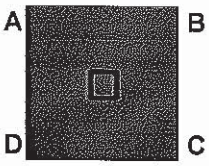

1DL+.75LL+.75SL
QA: 1290.58 psf
QB: 1290.58 psf
QC: 1290.58 psf
QD: 1290.58 psf
NAZ: -1 in
NAX: -1 in

Footing Flexure Design (Bottom Bars)

As-min x-dir (Top Flexure): **.78 in^2**
As-min z-dir (Top Flexure): **.78 in^2**
As-min x-dir (Bot Flexure): **.78 in^2**
As-min z-dir (Bot Flexure): **.78 in^2**

As-min x-dir (T & S): **.648 in^2**
As-min z-dir (T & S): **.648 in^2**

Description	Categories and Factors	Mu-xx UC Max	Mu-xx (k-ft)	z-Dir As Required (in^2)	z-Dir As Provided (in^2)	Mu-zz UC Max	Mu-zz (k-ft)	x-Dir As Required (in^2)	x-Dir As Provided (in^2)
ACI 9-1	1.4DL	.14909	3.26	.112	.785	.14909	3.26	.112	.785
ACI 9-2 (a)	1.2DL+1.6LL	.13693	3	.103	.785	.13693	3	.103	.785
ACI 9-2 (b)	1.2DL+1.6LL+.5SL	.13916	3.05	.105	.785	.13916	3.05	.105	.785
ACI 9-3 (b)	1.2DL+1.6SL+1LL	.14064	3.08	.106	.785	.14064	3.08	.106	.785

Footing Shear Check

Two Way (Punching) Vc: **65 k**
One Way (x Dir. Cut) Vc **23.4 k**
One Way (z Dir. Cut) Vc: **23.4 k**

Description	Categories and Factors	Punching Vu(k)	Punching Vu/øVc	x Dir. Cut Vu(k)	x Dir. Cut Vu/øVc	z Dir. Cut Vu(k)	z Dir. Cut Vu/øVc
ACI 9-1	1.4DL	11.018	.226	2.958	.169	2.958	.169
ACI 9-2 (a)	1.2DL+1.6LL	10.12	.208	2.717	.155	2.717	.155
ACI 9-2 (b)	1.2DL+1.6LL+.5SL	10.284	.211	2.761	.157	2.761	.157
ACI 9-3 (b)	1.2DL+1.6SL+1LL	10.394	.213	2.791	.159	2.791	.159

Concrete Bearing Check (Vertical Loads Only)

Bearing Bc : **153 k**

Description	Categories and Factors	Bearing Bu (k)	Bearing Bu/⌀Bc
ACI 9-1	1.4DL	12.529	.126
ACI 9-2 (a)	1.2DL+1.6LL	11.507	.116
ACI 9-2 (b)	1.2DL+1.6LL+.5SL	11.694	.118
ACI 9-3 (b)	1.2DL+1.6SL+1LL	11.819	.119

Overturning Check (Service)

Description	Categories and Factors	Mo-xx (k-ft)	Ms-xx (k-ft)	Mo-zz (k-ft)	Ms-zz (k-ft)	OSF-xx	OSF-zz
ASCE ASD 1	1DL	0	16.461	0	16.461	NA	NA
ASCE ASD 2	1DL+1LL	0	17.181	0	17.181	NA	NA
ASCE ASD 3 (b)	1DL+1SL	0	17.023	0	17.023	NA	NA
ASCE ASD 4 (b)	1DL+.75LL+.75SL	0	17.423	0	17.423	NA	NA

Mo-xx: Governing Overturning Moment about AD or BC
Ms-xx: Governing Stablizing Moment about AD or BC
OSF-xx: Ratio of Ms-xx to Mo-xx

Sliding Check (Service)

Description	Categories and Factors	Va-xx (k)	Vr-xx (k)	Va-zz (k)	Vr-zz (k)	SR-xx	SR-zz
ASCE ASD 1	1DL	0	3.285	0	3.285	NA	NA
ASCE ASD 2	1DL+1LL	0	3.429	0	3.429	NA	NA
ASCE ASD 3 (b)	1DL+1SL	0	3.397	0	3.397	NA	NA
ASCE ASD 4 (b)	1DL+.75LL+.75SL	0	3.477	0	3.477	NA	NA

Va-xx: Applied Lateral Force to Cause Sliding Along xx Axis
Vr-xx: Resisting Lateral Force Against Sliding Along xx Axis
SR-xx: Ratio of Vr-xx to Va-xx

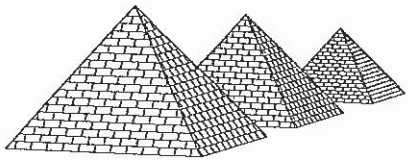

Precision Structural Engineering, Inc.

LATERAL ANALYSIS & DESIGN:

Pages 3,000 - 3,999

250-A Main Street
Klamath Falls, OR. 97601

E-Mail: info@structure1.com
Web: www.structure1.com

ph. (541) 850-6300
fax (541) 850-6233

Precision Structural Engineering, Inc.
250 Main Street, Suite A • Klamath Falls, OR 97601
Tel (541) 850-8300 • FAX (541) 850-8233

Medford Office
836 Mason Way (off Sage Road) • Medford, OR 97501
Tel (541) 858-8500

www.structure1.com • Email: info@structure1.com

PROJECT NO. Romtec 216-7 SHEET 3000 OF _____

PROJECT NAME Point No Point Restroom DESIGNED BY RH DATE _____

SUBJECT Lateral 18574 CHECKED BY _____ DATE _____

4' Masonry Shearwall

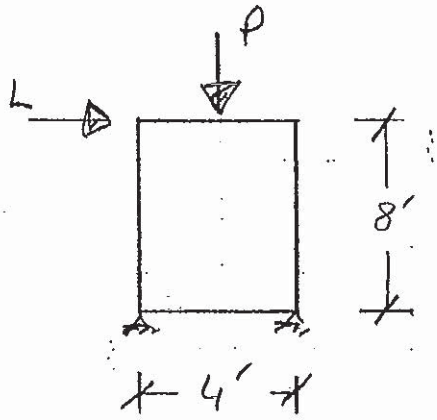

P: DL = 10 psf × 8 ft. = 80 plf
SL = 25 psf × 8 ft. = 200 plf

L:

$W_L = [(10.7 psf \cdot \sin 26.6°) \times 5 ft. \times 13 ft.] +$ (pg. 107)
$18 psf \times 4 ft. \times 12 ft.$

$W_L = 1189$ lb.

$E_L = 6600$ lb. / 2 = 3300 lb. (pg. 104)

USE [6" CMU w/ #4 @ 16" o.c. horz. & vert.]

8' Masonry Shearwall

* Loads same as above

Length = 8'

USE [6" CMU w/ #4 @ 32" o.c. horz. & vert.]

PROJECT : Point No Point Restroom 18574 | PAGE :
CLIENT : Romtec | DESIGN BY : RMH
JOB NO. : Romtec 216-7 | DATE : | REVIEW BY :

Masonry Shear Wall Design Based on TMS 402-11 / 2012 IBC (both ASD and SD)

INPUT DATA & DESIGN SUMMARY

SPECIAL INSPECTION (0=NO, 1=YES)		1	Yes
(This option only for local jurisdiction amendments to the code, not part of TMS.)			
TYPE OF MASONRY (1=CMU, 2=BRICK)		1	CMU
MASONRY STRENGTH	f_m' =	1.5	ksi
REBAR YIELD STRESS	f_y =	60	ksi
ALLOWABLE 30% INCREASING ? (IBC 1605.3.2)			Yes
SEISMIC PERFORMANCE CATEGORY (C,D,E, 0=WIND, 5=GRAVITY)		D	Seismic D
SERVICE AXIAL LOAD	P =	1.12	kips, at middle of L_w
SERVICE SHEAR LOAD	V_x =	3.3	kips, (in-plane force)
SERVICE MOMENT LOAD	M_x =	26.4	ft-kips, (top flange, bf1, compression)
	M_y =	0.196	ft-kips, (out-of-plane, left b11 & b21, compression)
EFFECTIVE HEIGHT OF WALL	h_w =	8	ft
LENGTH OF SHEAR WALL	L_w =	4	ft, (within vertical control joints)

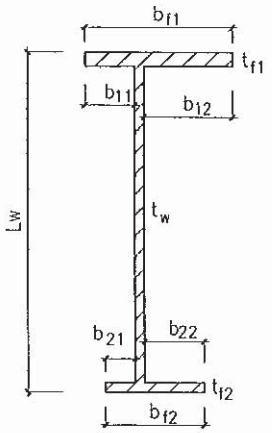

THE WALL DESIGN IS ADEQUATE.

THICKNESS OF WALL	t_w =	6	in							
REINFORCING OF WALL		1	#	4	at each ends, with	4	in center to edge.			
A_{sh}, Horizontal	1	#	4	@	16	in o.c.				
A_{sv}, Vertical	1	#	4	@	16	in o.c.				

TOP FLANGE (COMPRESSION)	b_{11} =	0	in ,	b_{12} =	0	in ,	b_{f1} =	6	in ,(TMS 1.9.4.2.3)		
t_{f1} =	8	in ,	1	#	4	@	32	in o.c., Vertical			
BOTTOM FLANGE	b_{21} =	0	in ,	b_{22} =	0	in ,	b_{f2} =	6	in, (TMS 1.9.4.2.3)		
t_{f2} =	8	in ,	1	#	4	@	32	in o.c., Vertical			

ANALYSIS

CHECK FLEXURAL & AXIAL CAPACITY BY ALLOWABLE STRESS DESIGN (ASD)

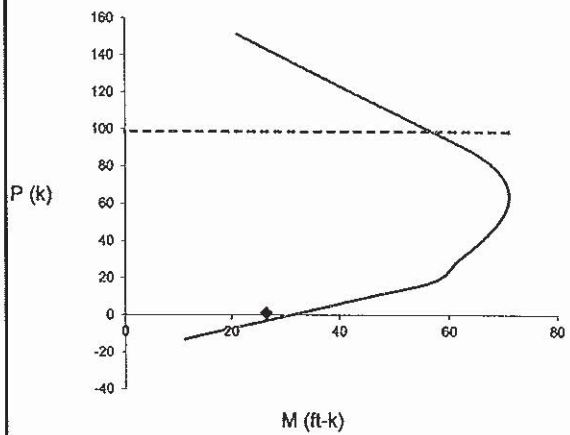

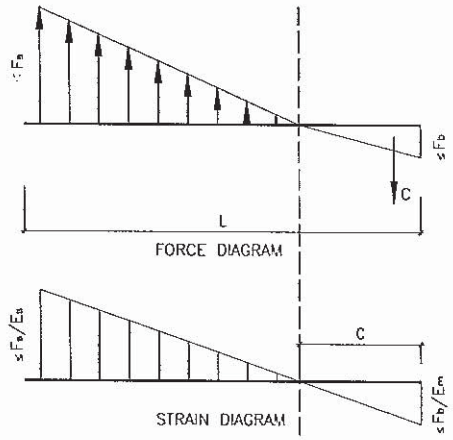

P (load) =	1.12	kips	<	P (allowable) = P_a =	98.7155	kips		
M (resultant) = $(M_x^2 + M_y^2)^{0.5}$ =	26.4007	ft-kips	<	M (allowable) =	32.7142	ft-kips	[Satisfactory]	
Where E_m =	1350	ksi, (TMS 1.8.2.2.1)		A_n =	276	in^2		
E_s =	29000	ksi, (TMS 1.8.2.1)		A_{st} =	0.80	in^2		
Scale Factor =	1.333	, (TMS 2.1.2.3)		$f_s \geq$	0	ksi, (TMS 2.3.3.3)		
F_b =	0.660	ksi, (TMS 2-18)		h / r =	59	, neglected conservatively flanges.		
F_s =	32.00	ksi, (TMS 2.3.3.1)		P_a =	98.7155	kips, (TMS 2.3.4.2.1)		

(cont'd)

CHECK FLEXURAL & AXIAL CAPACITY BY STRENGTH DESIGN (SD)

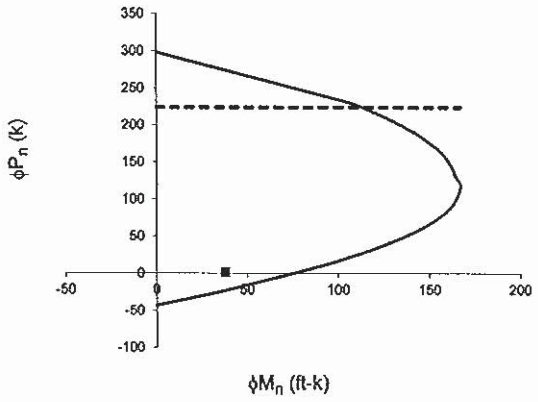

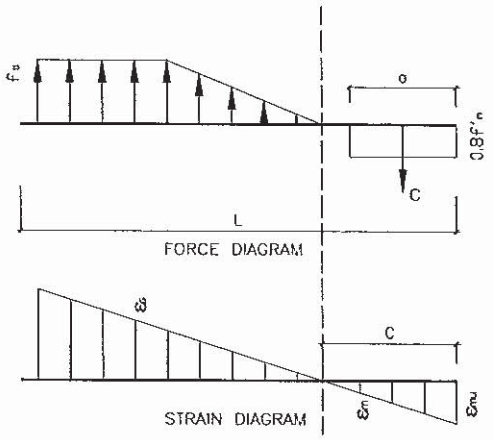

$P_u = 1.2\ P =$	1.344	kips	<	$\phi P_n =$	223.768	kips, (TMS 402 3.3.4.1.1)	
$M_u = (1/0.7)\ (M_x^2 + M_y^2)^{0.5} =$	37.7153	ft-kips	<	$\phi M_n =$	77.3759	ft-kips, at P_u level.	
			[Satisfactory]				
Where $\varepsilon_{mu} =$	0.0025	, (TMS 3.3.2.c)		d =	47	in	
$\phi =$	0.9	, (TMS 3.1.4.1)		$f_m' =$	1.5	ksi	

CHECK SHEAR CAPACITY (ASD), (TMS 2.3.6)

$$F_v = MAX\left\{(SF)\left[\frac{1}{4}\left(4-1.75MIN\left(1\ ,\ \frac{M_T}{Vd}\right)\right)\sqrt{f_m'}+0.25\frac{P}{A_n}\right]+0.5\frac{A_v F_s d}{A_n s}\ ,\ (SF)\left[\frac{1}{2}\left(4-1.75MIN\left(1\ ,\ \frac{M_T}{Vd}\right)\right)\sqrt{f_m'}+0.25\frac{P}{A_n}\right]\right\}$$

= 64 psi > 1.5 f_v = 18 psi [Satisfactory]

(factor 1.5 from TMS 402 1.18.3.2.6.1.2)

$$F_{v,\,Maximum} = (SF)\,MIN\left[3\ ,\ MAX\left(2\ ,\ 2+\frac{4}{3}\left(1-\frac{M_T}{Vd}\right)\right)\right]\sqrt{f_m'} = 103 \text{ psi} > 1.5\ f_v$$

[Satisfactory]

CHECK MINIMUM REINFORCEMENTS

$A_{sh,min} =$	0.101	in^2/ft	<	$A_{sh,actual} =$	0.150	in^2/ft	[Satisfactory] (TMS 1.18.3.2.6)
$S_{sh,max} =$	16	in	>	$S_{sh,actual} =$	16	in	[Satisfactory] (TMS 1.18.3.2.6)
$A_{sv,min} =$	0.047	in^2/ft	<	$A_{sv,actual} =$	0.150	in^2/ft	[Satisfactory] (TMS 1.18.3.2.6)
$S_{sv,max} =$	16	in	>	$S_{sv,actual} =$	16	in	[Satisfactory] (TMS 1.18.3.2.6)

CHECK MAXIMUM REINFORCEMENT PERCENTAGE

$$\rho_{max} = \frac{n f_m'}{2 f_y\left(n+\frac{f_y}{f_m'}\right)} = 0.0044 > \rho = 0.0008 \text{ [Satisfactory]}$$

(TMS 402 2.3.4.4)

PROJECT : Point No Point Restroom 18574 | PAGE :
CLIENT : Romtec | DESIGN BY : RMH
JOB NO. : Romtec 216-7 | DATE : | REVIEW BY :

Masonry Shear Wall Design Based on TMS 402-11 / 2012 IBC (both ASD and SD)

INPUT DATA & DESIGN SUMMARY

SPECIAL INSPECTION (0=NO, 1=YES)		1	Yes
(This option only for local jurisdiction amendments to the code, not part of TMS.)			
TYPE OF MASONRY (1=CMU, 2=BRICK)		1	CMU
MASONRY STRENGTH	f_m' =	1.5	ksi
REBAR YIELD STRESS	f_y =	60	ksi
ALLOWABLE 30% INCREASING ? (IBC 1605.3.2)			Yes
SEISMIC PERFORMANCE CATEGORY (C,D,E, 0=WIND, 5=GRAVITY)		D	Seismic D

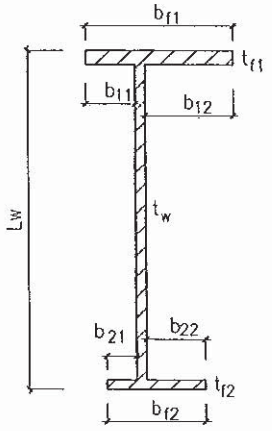

SERVICE AXIAL LOAD	P =	2.24	kips, at middle of L_w
SERVICE SHEAR LOAD	V_x =	3.3	kips, (in-plane force)
SERVICE MOMENT LOAD	M_x =	26.4	ft-kips, (top flange, bf1, compression)
	M_y =	0.196	ft-kips, (out-of-plane, left b11 & b21, compression)
EFFECTIVE HEIGHT OF WALL	h_w =	8	ft
LENGTH OF SHEAR WALL	L_w =	8	ft, (within vertical control joints)

[THE WALL DESIGN IS ~~NOT~~ ADEQUATE.]

THICKNESS OF WALL	t_w =	6	in					
REINFORCING OF WALL		1	#	4	at each ends, with	4	in center to edge.	See next page for explanation.
A_{sh}, Horizontal	1	#	4	@	32	in o.c.		
A_{sv}, Vertical	1	#	4	@	32	in o.c.		

TOP FLANGE (COMPRESSION)	b_{11} =	0	in ,	b_{12} =	0	in ,	b_{f1} =	6	in ,(TMS 1.9.4.2.3)	
t_{f1} =	8	in ,	1	#	4	@	32	in o.c., Vertical		
BOTTOM FLANGE	b_{21} =	0	in ,	b_{22} =	0	in ,	b_{f2} =	6	in, (TMS 1.9.4.2.3)	
t_{f2} =	8	in ,	1	#	4	@	32	in o.c., Vertical		

ANALYSIS

CHECK FLEXURAL & AXIAL CAPACITY BY ALLOWABLE STRESS DESIGN (ASD)

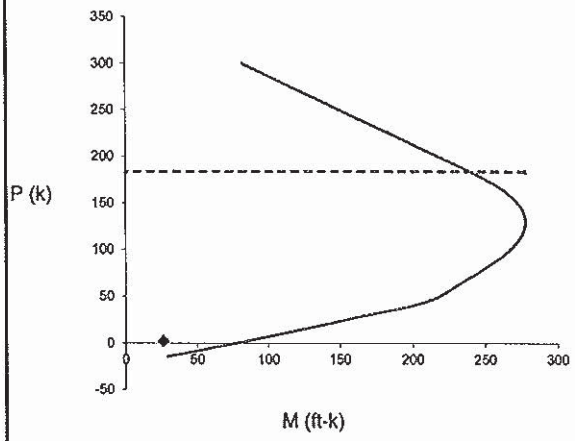

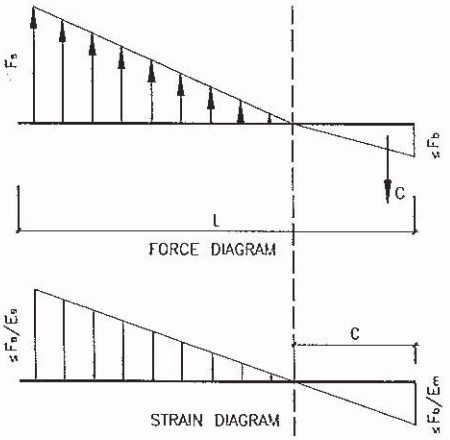

P (load) =	2.24	kips	<	P (allowable) = P_a =	183.619	kips	
M (resultant) = $(M_x^2 + M_y^2)^{0.5}$ =	26.4007	ft-kips	<	M (allowable) =	84.2542	ft-kips	[Satisfactory]

Where E_m =	1350	ksi, (TMS 1.8.2.2.1)		A_n =	546	in^2
E_s =	29000	ksi, (TMS 1.8.2.1)		A_{st} =	0.90	in^2
Scale Factor =	1.333	, (TMS 2.1.2.3)		$f_s \geq$	0	ksi, (TMS 2.3.3.3)
F_b =	0.660	ksi, (TMS 2-18)		h / r =	59	, neglected conservatively flanges.
F_s =	32.00	ksi, (TMS 2.3.3.1)		P_a =	183.619	kips, (TMS 2.3.4.2.1)

(cont'd)

CHECK FLEXURAL & AXIAL CAPACITY BY STRENGTH DESIGN (SD)

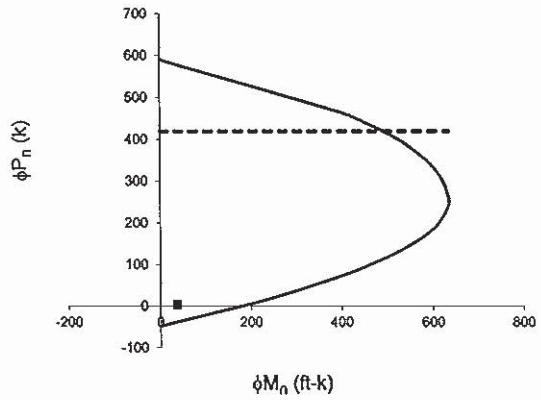

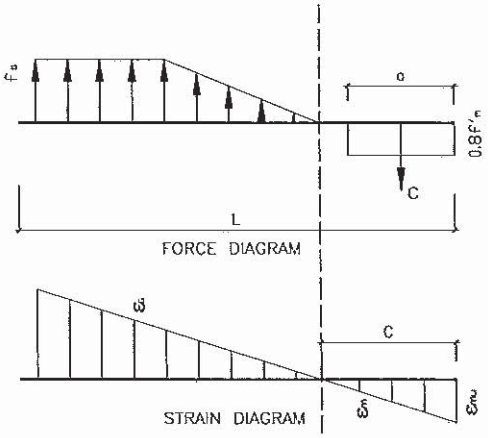

$P_u = 1.2\ P =$	2.688	kips	<	$\phi P_n =$	418.926	kips, (TMS 402 3.3.4.1.1)	
$M_u = (1/0.7)\ (M_x^2 + M_y^2)^{0.5} =$	37.7153	ft-kips	<	$\phi M_n =$	190.601	ft-kips, at P_u level.	
			[Satisfactory]				

Where ε_{mu} = 0.0025 , (TMS 3.3.2.c) d = 95 in

ϕ = 0.9 , (TMS 3.1.4.1) f_m' = 1.5 ksi

CHECK SHEAR CAPACITY (ASD), (TMS 2.3.6)

$$F_v = MAX\left\{(SF)\left[\frac{1}{4}\left(4-1.75MIN\left(1\ ,\ \frac{M_T}{Vd}\right)\right)\sqrt{f_m'}+0.25\frac{P}{A_n}\right]+0.5\frac{A_v F_s d}{A_n s}\ ,\ (SF)\left[\frac{1}{2}\left(4-1.75MIN\left(1\ ,\ \frac{M_T}{Vd}\right)\right)\sqrt{f_m'}+0.25\frac{P}{A_n}\right]\right\}$$

= 59 psi > 1.5 f_v = 9 psi [Satisfactory]

(factor 1.5 from TMS 402 1.18.3.2.6.1.2)

$$F_{v,\,Maximum} = (SF)\,MIN\left[3\ ,\ MAX\left(2\ ,\ 2+\frac{4}{3}\left(1-\frac{M_T}{Vd}\right)\right)\right]\sqrt{f_m'} =$$ 103 psi > 1.5 f_v

[Satisfactory]

CHECK MINIMUM REINFORCEMENTS

$A_{sh,min}$ =	0.101	in^2/ft	>	$A_{sh,actual}$ =	0.075	in^2/ft	[Unsatisfactory] (TMS 1.18.3.2.6)
$S_{sh,max}$ =	24	in	<	$S_{sh,actual}$ =	32	in	[Unsatisfactory] (TMS 1.18.3.2.6)
$A_{sv,min}$ =	0.047	in^2/ft	<	$A_{sv,actual}$ =	0.075	in^2/ft	[Satisfactory] (TMS 1.18.3.2.6)
$S_{sv,max}$ =	24	in	<	$S_{sv,actual}$ =	32	in	[Unsatisfactory] (TMS 1.18.3.2.6)

CHECK MAXIMUM REINFORCEMENT PERCENTAGE

$$\rho_{max} = \frac{n f_m'}{2 f_y\left(n+\frac{f_y}{f_m'}\right)} =$$ 0.0044 > ρ = 0.0004 [Satisfactory]

(TMS 402 2.3.4.4)

These requirements are for Stack Bond masonry walls.
The walls on this building are Running Bond.
Min. Spacing = 96" / 3 = 32"
Min. Area = (12" x 5.625") * 0.0007 = 0.047 in^2

Precision Structural Engineering, Inc.
250 Main Street, Suite A • Klamath Falls, OR 97601
Tel (541) 850-8300 • FAX (541) 850-8233

Medford Office
836 Mason Way (off Sage Road) • Medford, OR 97501
Tel (541) 858-8500

www.structure1.com • Email: info@structure1.com

PROJECT NO. Romtec 216-7 SHEET 3010 OF _____

PROJECT NAME Point No Point Restroom DESIGNED BY RH DATE _____

SUBJECT Lateral - 18574 CHECKED BY _____ DATE _____

Wall to Roof Anchorage

F = 239 plf ~pg 3011

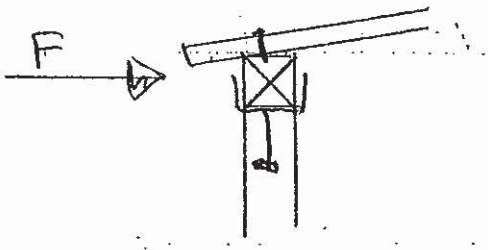

Decking to Beam

USE [2- 10d Nails @ 6" o.c.] cap. = 118 lb × 1.6 × 4/ft = 755 plf

Beam to Wall

USE [Romtec Beam Bracket @ 48" o.c.]

3011

Lateral Force for One-Story Wall Based on 2012 IBC

INPUT DATA

WALL THICKNESS	t	=	8	in
PARAPET HEIGHT	h_p	=	0	ft
WALL HEIGHT	h	=	12	ft
TOTAL WALL DENSITY	ρ	=	125	pcf
SEISMIC PARAMETER	S_{DS}	=	0.855	(ASCE 7 Sec 11.4.4)
SEISMIC DESIGN CATEGOR'	SDC	=	D	
DIAPHRAGM FLEXIBLE ? (0=no, 1=yes)			1	Yes
SEISMIC IMPORTANCE FACTOR	I_e	=	1	(ASCE 7 Tab 11.5-1)
WIND IMPORTANCE FACTOR	I_w	=	1.0	(ASCE 7 Tab 1.5-2)
BASIC WIND SPEED	V	=	110	mph, (ASCE 7 Sec 26.5.1)
EXPOSURE CATEGORY (B, C, D)		=	D	
TOPOGRAPHIC FACTOR	K_{zt}	=	1	Flat, (ASCE 7 Tab 26.8-1)

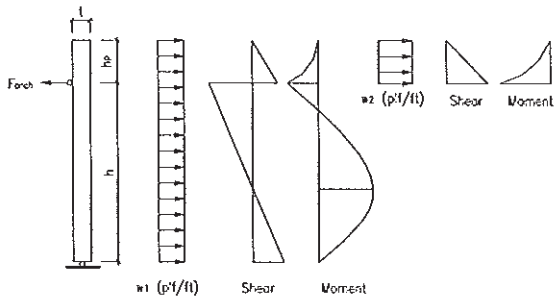

DESIGN SUMMARY

Out-of-plane force for wall design w_1 = 24.5 psf (Wind governs)
Out-of-plane force for parapet design w_2 = 64.8 psf (Wind governs)
Out-of-plane force for anchorage design F_{anch} = 239 plf (Horizontal direction)
(The governing seismic & wind forces have been reduced by 0.7 & 0.6 for ASD)

WIND ANALYSIS

Out-of-plane wind force for wall design (ASCE 7, Eq. 30.4-1)

$$w_{1,wind} = 0.6q_h\left[(GC_P)-(GC_{Pi})\right] = \left(0.00256K_hK_{Zt}K_dV^2\right)\left[(GC_P)-(GC_{Pi})\right] = 24.5 \text{ psf}$$

Where : K_h = 1.03 , (mean roof h = 12 ft, changeable) (ASCE 7 Tab. 28.3-1)
K_d = 0.85 , (Tab. 26.6-1)
GC_p = -1.33 , (corner ? Yes , TA = 16 ft^2) (ASCE 7 30.4.2)
GC_{pi} = 0.18 (ASCE 7 Fig. 26.11-1)

Out-of-plane wind force for parapet design (ASCE 7, Eq. 30.9-1)

$$w_{2,wind} = 0.6q_p\left[(GC_P)-(GC_{Pi})\right] = \left(0.00256K_hK_{Zt}K_dV^2\right)\left[(GC_P)-(GC_{Pi})\right] = 64.8 \text{ psf, (ASCE 7,6.5.12.4.4)}$$

Where : K_h = 1.03 , (ASCE 7 Tab. 28.3-1)
K_d = 0.85 , (ASCE 7 Tab. 26.6-1)
GC_p = -1.40 , = 1.00 (TA = 0 ft^2) wall, (ASCE 7 30.4.2)
GC_p = -2.80 roof, (ASCE 7 30.4.2)
GC_{pi} = 0.18 (ASCE 7 Fig. 26.11-1)

Out-of-plane wind force for anchorage design

$$F_{anch,wind} = \frac{h}{2}w_{1,wind} + h_p\left(1+\frac{h_p}{2h}\right)w_{2,wind} = 147 \text{ plf (Horizontal)}$$

SEISMIC ANALYSIS

Out-of-plane seismic force for wall design (ASCE 7, Sec.12.11.1)

$$w_{1,seismic} = MAX\left(0.4I_eS_{DS}W_p \ , 0.1W_p\right) = 0.34\ W_p = 28.5 \text{ psf}$$

Where : W_p = 83.3 psf , I_e = 1.0 (IBC Tab 1604.5 & ASCE 7 Tab 1.5-2)

Out-of-plane seismic force for parapet design (ASCE 7, Sec. 13.3.1)

$$w_{2,seismic} = MAX\left[0.3S_{DS}I_eW_p \ , \ MIN\left(\frac{1.2a_pS_{DS}I_eW_p}{R_p} \ , \ 1.6S_{DS}I_eW_p\right)\right] = 1.03\ W_p = 85.5 \text{ psf}$$

Where : a_p = 2.5 , (ASCE 7 Tab. 13.5-1)
I_e = 1.0 , (ASCE 7 Sec. 13.1.3)
R_p = 2.5 (ASCE 7 Tab. 13.5-1)

Out-of-plane seismic force for anchorage design

For masonry or concrete under seismic design category A & B, both flexible & rigid diaphragm (ASCE 7 Sec. 12.11.2)

$$F_{anch,seismic} = MAX\left[0.4S_{DS}IW_p\frac{\left(h+h_p\right)^2}{2h} \ , \ 0.1W_p\frac{\left(h+h_p\right)^2}{2h} \ , \ 400S_{DS}I \ , \ F_{min}\right] = 4.10\ W_p = 342 \text{ plf (Horizontal)}$$ (Not applicable)

Where : F_{min} = 280 plf (ASCE 7 Sec. 12.11.2 & 11.7.3)

For seismic design category C and above, flexible diaphragm (ASCE 7 Sec. 12.11.2.1)

$$F_{anch,seismic} = MAX\left[0.8S_{DS}IW_p\frac{\left(h+h_p\right)^2}{2h} \ , \ 0.1W_p\frac{\left(h+h_p\right)^2}{2h} \ , \ 400S_{DS}I \ , \ F_{min}\right] = 4.10\ W_p = 342 \text{ plf (Horizontal)}$$ (Applicable)

For seismic design category C and above, rigid diaphragm (ASCE 7 Sec. 12.11.2 & Sec. 13.3.1)

$$F_{anch,seismic} = MAX\left\{MAX\left[0.3S_{DS}I_e \ , \ MIN\left(\frac{1.2a_pS_{DS}I_e}{R_p} \ , \ 1.6S_{DS}I_e\right)\right]W_p\frac{\left(h+h_p\right)^2}{2h} \ , \ 400S_{DS}I \ , \ F_{min}\right\}$$

= 4.10 W_p = 342 plf (Horizontal) (Not applicable)

Where : a_p = 1.0 (ASCE 7 Tab. 13.5-1)
R_p = 1.5 (1.5, ASCE 7 13.4.2 or 2.5, ASCE 7 Tab 13.5-1)

3012

Table 11N COMMON WIRE, BOX, or SINKER NAILS: Reference Lateral Design Values (Z) for Single Shear (two member) Connections[1,2,3,4]

for sawn lumber or SCL with both members of identical specific gravity

Side Member Thickness	Nail Diameter	Common Wire Nail	Box Nail	Sinker Nail	G=0.67 Red Oak	G=0.55 Mixed Maple Southern Pine	G=0.5 Douglas Fir-Larch	G=0.49 Douglas Fir-Larch (N)	G=0.46 Douglas Fir(S) Hem-Fir(N)	G=0.43 Hem-Fir	G=0.42 Spruce-Pine-Fir	G=0.37 Redwood (open grain)	G=0.36 Eastern Softwoods Spruce-Pine-Fir(S) Western Cedars Western Woods	G=0.35 Northern Species
t_s	D	Pennyweight												
in.	in.				lbs.	lbs.	lbs.	lbs.	lbs.	lbs.	lbs.	lbs.	lbs.	lbs.
3/4	0.099		6d	7d	73	61	55	54	51	48	47	39	38	36
	0.113	6d	8d	8d	94	79	72	71	65	58	57	47	46	44
	0.120			10d	107	89	80	77	71	64	62	52	50	48
	0.128		10d		121	101	87	84	78	70	68	57	56	54
	0.131	8d			127	104	90	87	80	73	70	60	58	56
	0.135		16d	12d	135	108	94	91	84	76	74	63	61	58
	0.148	10d	20d	16d	154	121	105	102	94	85	83	70	69	66
	0.162	16d	40d		183	138	121	117	108	99	96	82	80	77
	0.177			20d	200	153	134	130	121	111	107	92	90	87
	0.192	20d		30d	206	157	138	134	125	114	111	96	93	90
	0.207	30d		40d	216	166	147	143	133	122	119	103	101	97
	0.225	40d			229	178	158	154	144	132	129	112	110	106
	0.244	50d		60d	234	182	162	158	147	136	132	115	113	109
1	0.099		6d	7d	73	61	55	54	51	48	47	42	41	40
	0.113	6d[4]	8d	8d	94	79	72	71	67	63	61	55	54	51
	0.120			10d	107	89	81	80	76	71	69	60	59	56
	0.128		10d		121	101	93	91	86	80	79	66	64	61
	0.131	8d			127	106	97	95	90	84	82	68	66	63
	0.135		16d	12d	135	113	103	101	96	89	86	71	69	66
	0.148	10d	20d	16d	154	128	118	115	109	99	96	80	77	74
	0.162	16d	40d		184	154	141	137	125	113	109	91	89	85
	0.177			20d	213	178	155	150	138	125	121	102	99	95
	0.192	20d		30d	222	183	159	154	142	128	124	105	102	98
	0.207	30d		40d	243	192	167	162	149	135	131	111	109	104
	0.225	40d			268	202	177	171	159	144	140	120	117	112
	0.244	50d		60d	274	207	181	175	162	148	143	123	120	115
1-1/4	0.099		6d[4]	7d[4]	73	61	55	54	51	48	47	42	41	40
	0.113	6d[4]	8d	8d[4]	94	79	72	71	67	63	61	55	54	52
	0.120			10d	107	89	81	80	76	71	69	62	60	59
	0.128		10d		121	101	93	91	86	80	79	70	69	67
	0.131	8d[4]			127	106	97	95	90	84	82	73	72	70
	0.135		16d	12d	135	113	103	101	96	89	88	78	76	74
	0.148	10d	20d	16d	154	128	118	115	109	102	100	89	87	84
	0.162	16d	40d		184	154	141	138	131	122	120	103	100	95
	0.177			20d	213	178	163	159	151	141	136	113	110	105
	0.192	20d		30d	222	185	170	166	157	145	140	116	113	108
	0.207	30d		40d	243	203	186	182	169	152	147	123	119	114
	0.225	40d			268	224	200	193	177	160	155	130	127	121
	0.244	50d		60d	276	230	204	197	181	163	158	133	129	124
1-1/2	0.099			7d[4]	73	61	55	54	51	48	47	42	41	40
	0.113		8d[4]	8d[4]	94	79	72	71	67	63	61	55	54	52
	0.120			10d	107	89	81	80	76	71	69	62	60	59
	0.128		10d		121	101	93	91	86	80	79	70	69	67
	0.131	8d[4]			127	106	97	95	90	84	82	73	72	70
	0.135		16d	12d	135	113	103	101	96	89	88	78	76	74
	0.148	10d	20d	16d	154	128	118	115	109	102	100	89	87	84
	0.162	16d	40d		184	154	141	138	131	122	120	106	104	101
	0.177			20d	213	178	163	159	151	141	138	123	121	117
	0.192	20d		30d	222	185	170	166	157	147	144	128	126	120
	0.207	30d		40d	243	203	186	182	172	161	158	135	131	125
	0.225	40d			268	224	205	201	190	178	172	143	138	132
	0.244	50d		60d	276	230	211	206	196	181	175	146	141	135
1-3/4	0.113		8d[4]		94	79	72	71	67	63	61	55	54	52
	0.120			10d[4]	107	89	81	80	76	71	69	62	60	59
	0.128		10d[4]		121	101	93	91	86	80	79	70	69	67
	0.135		16d	12d	135	113	103	101	96	89	88	78	76	74
	0.148	10d[4]	20d	16d	154	128	118	115	109	102	100	89	87	84
	0.162	16d	40d		184	154	141	138	131	122	120	106	104	101
	0.177			20d	213	178	163	159	151	141	138	123	121	117
	0.192	20d		30d	222	185	170	166	157	147	144	128	126	122
	0.207	30d		40d	243	203	186	182	172	161	158	140	137	133
	0.225	40d			268	224	205	201	190	178	174	155	151	144
	0.244	50d		60d	276	230	211	206	196	183	179	159	154	147

1. Tabulated lateral design values (Z) shall be multiplied by all applicable adjustment factors (see Table 10.3.1).
2. Tabulated lateral design values (Z) are for common wire, box, and sinker nails (see Appendix L) inserted in side grain with nail axis perpendicular to wood fibers; minimum nail penetration, p, into the main member equal to 10D; and nail bending yield strengths (F_{yb}): F_{yb} = 100,000 psi for 0.099" ≤ D ≤ 0.142"; F_{yb} = 90,000 psi for 0.142" < D ≤ 0.177"; F_{yb} = 80,000 psi for 0.177" < D ≤ 0.236"; F_{yb} = 70,000 psi for 0.236" < D ≤ 0.273"
3. When 6D ≤ p < 10D, tabulated lateral design values (Z) shall be multiplied by p/10D.
4. Nail length is insufficient to provide 10D penetration. Tabulated lateral design values (Z) shall be adjusted per footnote 3.

PROJECT : Point No Point Restroom 18574
CLIENT : Romtec
JOB NO. : Romtec 216-7 DATE :
PAGE :
DESIGN BY : RMH
REVIEW BY :

Fastener Anchorage in Tension & Perpendicular Shear Based on TMS 402-11 / 2012 IBC

INPUT DATA & DESIGN SUMMARY

MASONRY STRENGTH	f_m'	=	1.5	ksi
FASTENER YIELD STRESS	f_y	=	60	ksi
SERVICE TENSION LOAD	b_a	=	0	kips / ft
SERVICE SHEAR LOAD	b_v	=	0.239	kips / ft
WALL THICKNESS	b	=	6	in
FASTENER DIAMETER	ϕ	=	5/8	in
EFFECTIVE EMBEDMENT	L_b	=	6	in
FASTENER SPACING	S	=	48	in
ALLOWABLE INCREASING ? (IBC/CBC 1605.3.2)			Yes	

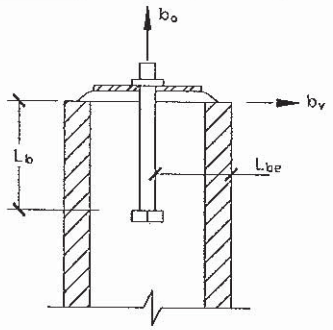

SECTION

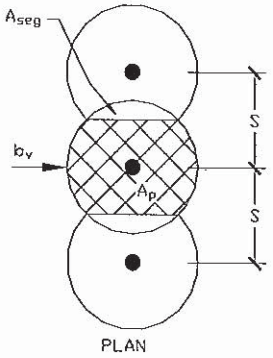

PLAN

[THE ANCHORAGE DESIGN IS ADEQUATE.]

ANALYSIS

CHECK MIN. EMBEDMENT (TMS 402 1.17.6)

$L_{b,min} = MIN[4\phi , 2] =$ 2.00 in < L_b [SATISFACTORY]

CHECK TENSION CAPACITY (TMS 402 2.1.4.3.1.1)

$B_a = MIN[1.25A_{pt}(f_m')^{0.5} , 0.6A_bf_y] =$ 0.95 kips / fasteners

> k S b_a [SATISFACTORY]

Where L_{be} = 2.50 in

$L = MIN[L_b , L_{be}] =$ 2.50 in, conservative value

$\theta = COS^{-1}(0.5S / L) =$ 0.00 rad

$A_{seg} = L^2 [\theta - 0.5 SIN(2\theta)] =$ 0.00 in^2

$A_{pt} = \pi L^2 - 2 A_{seg} =$ 19.67 in^2 (TMS 402 1.17.2)

$A_b = \pi \phi^2 / 4 =$ 0.31 in^2

k = 3/4

CHECK SHEAR CAPACITY (TMS 402 2.1.4.2.3)

$B_v = MIN[1.25A_{pv}(f_m')^{0.5} , 350(A_bf_m')^{1/4} , 2.5A_{pt}(f_m')^{0.5} , 0.36A_bf_y] =$ 0.95 kips / fasteners

> k S b_v [SATISFACTORY]

Where $A_{pv} = A_{pt} =$ 19.67 in^2, since $L = MIN[L_b , L_{be}]$ used above, (TMS 402 1.17.3)

CHECK COMBINED SHEAR AND TENSION CAPACITY (TMS 402 2.1.4.3.3)

S b_a / B_a + S b_v / B_v = 1.00 < 1.33 [SATISFACTORY]

5.03 PRODUCT DATA SHEETS

Product Data Sheet Section

This section corresponds with the plan set, describing each component supplied by Romtec in the building kit. The data sheets may be submitted for approval by the reviewing authority and are for use in construction of the building.

***Note*: Romtec's proposal and quote were based on the configuration of components that is reflected in the following data sheets. Any request for changes to the proposed components may result in a price increase. This includes requests for options that are shown on the manufacturer data sheets, as well as any color or finish requests.**

The product data sheets are organized as follows:

5.03.1 STRUCTURE

Data sheets to follow.

MORTAR JOINT
Smooth Face Block
Color: GRAY

NCMA TEK

National Concrete Masonry Association
an information series from the national authority on concrete masonry technology

TYPICAL SIZES AND SHAPES OF CONCRETE MASONRY UNITS

TEK 2-1A
Unit Properties (2002)

Keywords: architectural units, bond beams, concrete brick, dimensions, equivalent thickness, lintels, screen block, sizes and shapes

INTRODUCTION

Concrete masonry is one of the most versatile building products available because of the wide variety of appearances that can be achieved using concrete masonry units. Concrete masonry units are manufactured in different sizes, shapes, colors, and textures to achieve a number of finishes and functions. In addition, because of its modular nature, different concrete masonry units can be combined within the same wall to achieve variations in texture, pattern, and color.

Certain concrete masonry sizes and shapes are considered standard, while others are popular only in certain regions. Local manufacturers can provide detailed information on specific products, or the feasibility of producing custom units. A more complete guide to concrete masonry units is the *Shapes and Sizes Directory* (ref. 2).

UNIT SIZES

Typically, concrete masonry units have nominal face dimensions of 8 in. (203 mm) by 16 in. (406 mm), available in nominal thicknesses of 4 , 6, 8, 10, and 12 in. (102, 152, 203, 254, and 305 mm). Nominal dimensions refer to the module size for planning bond patterns and modular layout with respect to door and window openings. Actual dimensions of concrete masonry units are typically 3/8 in. (9.5 mm) less than nominal dimensions, so that the 4 or 8 in. (102 or 203 mm) module is maintained with 3/8 in. (9.5 mm) mortar joints. Figure 1 illustrates nominal and actual dimensions for a nominal 8 x 8 x 16 in. (203 x 203 x 406 mm) concrete masonry unit. In addition to these standard sizes, other unit heights, lengths, and thicknesses may be available from local concrete masonry producers.

Standard Specification for Load-Bearing Concrete Masonry Units, ASTM C 90 (ref. 5) is the most frequently referenced standard for concrete masonry units. ASTM C 90 includes minimum face shell and web thicknesses for

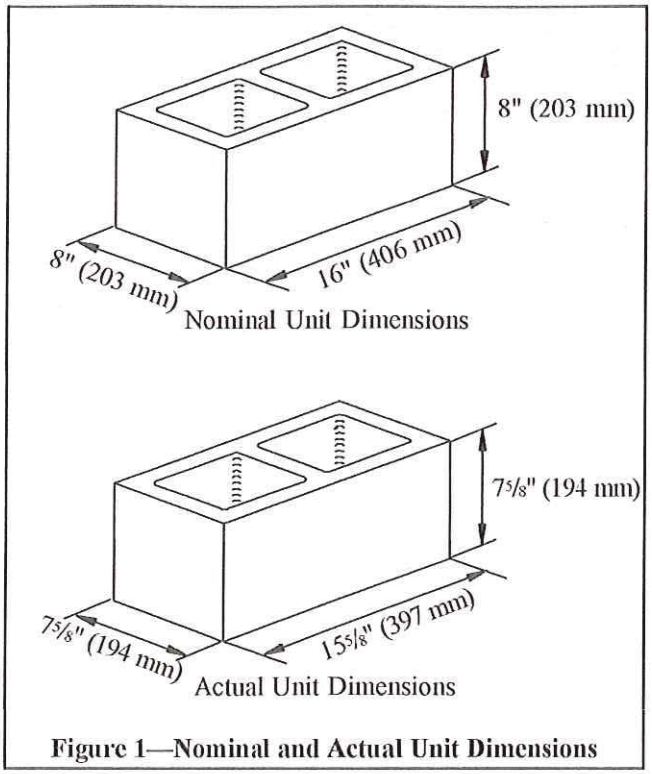

Figure 1—Nominal and Actual Unit Dimensions

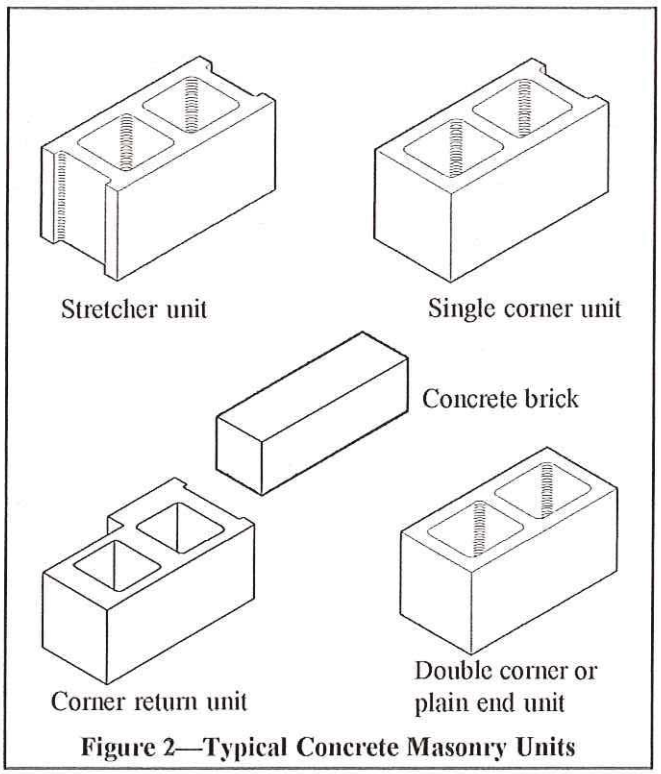

Figure 2—Typical Concrete Masonry Units

the different sizes of concrete masonry units as listed in Table 1. Overall unit dimensions (height, width, or length) are permitted to vary by ±1/8 in. (3.2 mm) from the dimensions specified by the manufacturer. Where required, units may be manufactured to closer tolerances than those permitted in ASTM C 90. ASTM C 90 also defines the difference between hollow and solid concrete masonry units. The net cross-sectional area of a solid unit is at least 75% of the gross cross-sectional area.

In addition to the "standard" sizes listed above, concrete brick is available in typical lengths of 8 and 16 in. (203 and 406 mm), nominal 4 in. (102 mm) width, and a wide range of heights. They may be 100% solid, or may have two or three cores. Like ASTM C 90, *Standard Specification for Concrete Building Brick*, ASTM C 55 (ref. 4), permits overall unit dimensions to vary ±1/8 in. (3.2 mm) from the dimensions specified by the manufacturer. Nominal dimensions of modular concrete brick equal the actual dimensions plus 3/8 in. (9.5 mm), the thickness of one standard mortar joint. However, nominal dimensions of nonmodular sized concrete brick usually exceed the standard dimensions by 1/8 to 1/4 in. (3.2 to 6.4 mm).

Table 1—Minimum Thickness of Face Shells and Webs (ref. 5)

Nominal width of unit, in. (mm)	Face shell thickness[a], in. (mm)	Web thickness	
		Webs[a], in. (mm)	Equivalent web thickness, in./linear foot[b,c] (mm/m)
3 (76) and 4 (102)	3/4 (19)	3/4 (19)	1 5/8 (136)
6 (152)	1 (25)[d]	1 (25)	2 1/4 (188)
8 (203)	1 1/4 (32)[d]	1 (25)	2 1/4 (188)
10 (254)	1 3/8 (35)[d]	1 1/8 (29)	2 1/2 (209)
	1 1/4 (32)[d,e]		
12 (305)	1 1/2 (38)	1 1/8 (29)	2 1/2 (209)
	1 1/4 (32)[d,e]		

[a] Average of measurements on 3 units taken at the thinnest point when measured as described in ASTM C 140 (ref. 3). When this standard is used for split face units, a maximum of 10% of a split face shell area is permitted to have thicknesses less than those shown, but not less than 3/4 in. (19.1 mm). When the units are solid grouted, the 10% limit does not apply.

[b] Average of measurements on 3 units taken at the thinnest point when measured as described in ASTM C 140. The minimum web thickness for units with webs closer than 1 in. (25.4 mm) apart shall be 3/4 in. (19.1 mm).

[c] Sum of the measured thickness of all webs in the unit, multiplied by 12 and divided by the length of the unit. Equivalent web thickness does not apply to the portion of the unit to be filled with grout. The length of that portion shall be deducted from the overall length of the unit for the calculation.

[d] For solid grouted masonry construction, minimum face shell thickness not less than 5/8 in. (16 mm).

[e] This face shell thickness is applicable where allowable design load is reduced in proportion to the reduction in thickness from basic face shell thicknesses shown, except that allowable design loads on solid grouted units shall not be reduced.

UNIT SHAPES

Concrete masonry unit shapes have been developed for a wide variety of applications. The most common shapes are shown in Figure 2. Typically, the face shells and webs are tapered on concrete masonry units. Depending on the core molds used in the manufacture of the units, face shells and webs may be tapered with a flare at one end, or may have a straight taper from top to bottom. The taper provides a wider surface for mortar and easier handling for the mason.

The shapes illustrated in Figure 3 have been developed specifically to accommodate reinforcement. **Open-ended units** allow the units to be threaded around reinforcing bars. This eliminates the need to lift units over the top of the reinforcing bar, or to thread the reinforcement through the masonry cores after the wall is constructed. Bond beams in concrete masonry walls can be accommodated either by saw-cutting out of a standard unit, or by using **bond beam units.** Bond beam units are either manufactured with reduced webs or with "knock-out" webs, which are removed prior to placement in the wall. Horizontal bond beam reinforcement is easily accommodated in these units. **Lintel units** are similar to the U shaped bond beam units. Lintel units are available in various depths to carry appropriate lintel loads over door and window openings. The solid bottom confines grout to the lintel. **Pilaster and column units** are used to easily accommodate a wall-column or wall-pilaster interface, allowing space for vertical reinforcement in

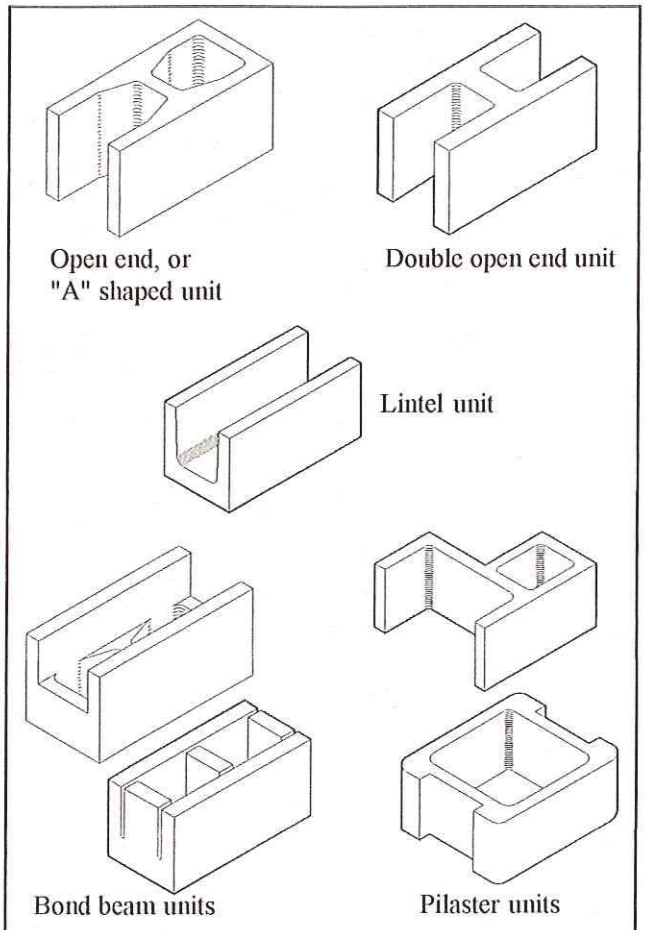

Figure 3—Shapes to Accommodate Reinforcement

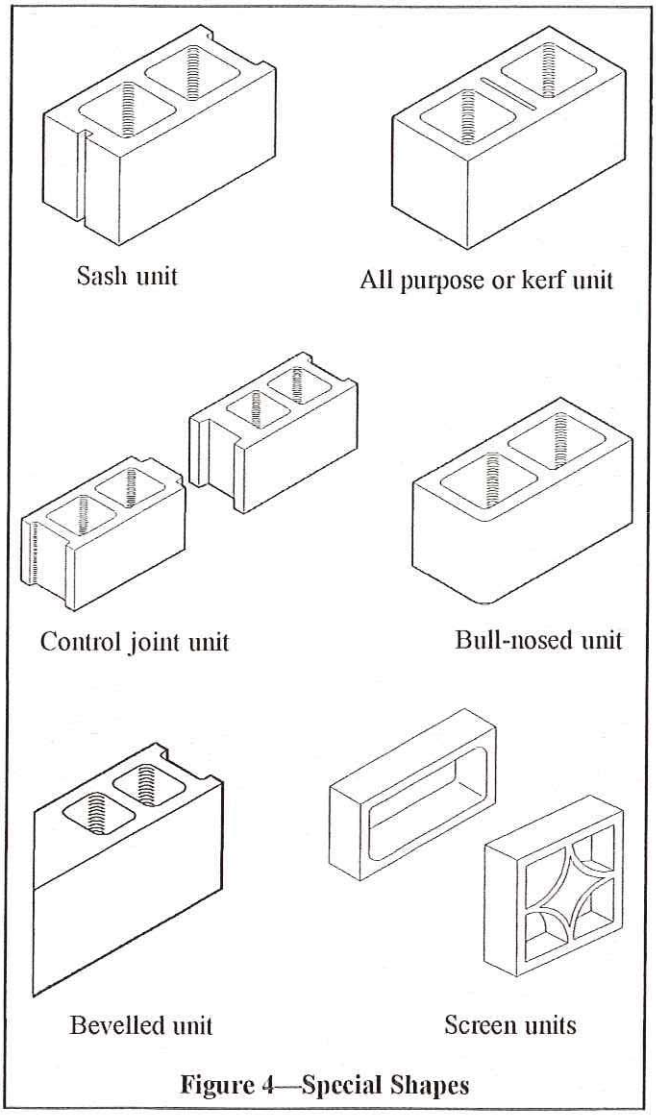

Figure 4—Special Shapes

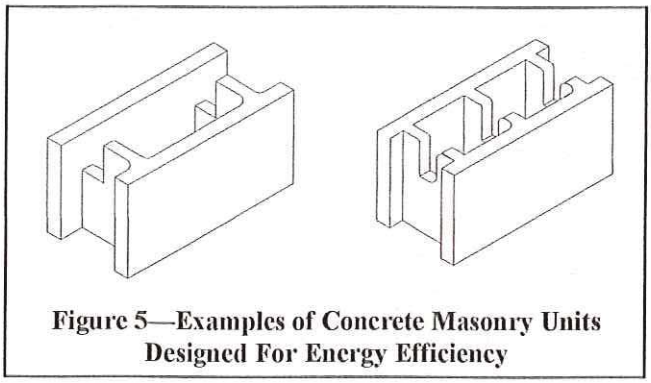

Figure 5—Examples of Concrete Masonry Units Designed For Energy Efficiency

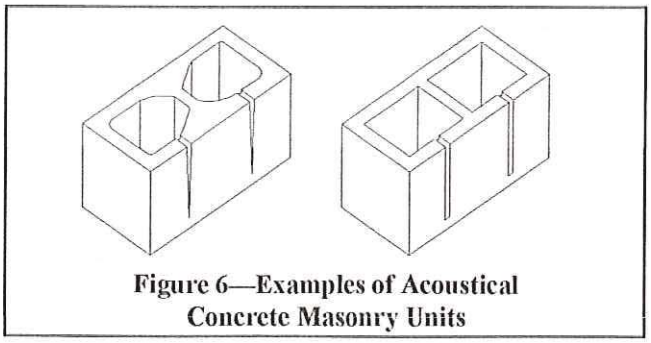

Figure 6—Examples of Acoustical Concrete Masonry Units

the hollow center.

Figure 4 shows units developed for specific wall applications. **Sash block** have a vertical groove molded into one end to accommodate a window sash. Sash block can be laid with the grooves adjacent to one another to accommodate a preformed control joint gasket. **Control joint units** are manufactured with one male and one female end to provide lateral load transfer across control joints. An **all-purpose or kerf unit** contains two closely spaced webs in the center, rather than the typical single web. This allows the unit to be easily split on the jobsite, producing two 8 in. (203 mm) long units, which are typically used adjacent to openings or at the ends or corner of a wall. **Bull-nosed units** are available with either a single or double bull nose, to soften corners. **Screen units** are available in many sizes and patterns. Typical applications include exterior fences, interior partitions, and openings within interior concrete masonry walls. **Bevelled-end units**, forming a 45° angle with the face of the unit, are used to form walls intersecting at 135° angles. Units in adjacent courses overlap to form a running bond pattern at the corner.

A variety of concrete masonry units are designed to increase energy efficiency. These units, examples of which are shown in Figure 5, may have reduced web areas to reduce heat loss through the webs. Web areas can be reduced by reducing the web height or thickness, reducing the number of webs, or both. In addition, the interior face shell of the unit can be made thicker than a typical face shell for increased thermal storage, and hence further increase energy efficiency. Insulating inserts can also be incorporated into standard concrete masonry units to increase energy efficiency.

Acoustical units (Figure 6) dampen sound, thus improving the noise reduction attributes of an interior space. Acoustical units are often used in schools, industrial plants, and churches, and to improve internal acoustics.

SURFACE FINISHES

The finished appearance of a concrete masonry wall can be varied with the size of units, shape of units, color of units and mortar, bond pattern, and surface finish of the units. The various shapes and sizes of concrete masonry units described above are often available in a choice of surface finishes. Some of the surfaces are molded into the units during the manufacturing process, while others are applied separately.

Figure 7 shows some of the more common surface textures available. Ribs, flutes, striations, offsets, and scores are accomplished by using a unit mold with the desired characteristics. Split-faced units are molded with two units face-to-face and then the units are mechanically split apart.

Glazed units are manufactured by bonding a permanent colored facing to a concrete masonry unit, providing a smooth impervious surface. Glazed units are often used for brightly-colored accent bands, and in gymnasiums, rest rooms, and indoor swimming pools where the stain and moisture resistant finish reduces maintenance. Glazed units comply to *Standard Specification for Prefaced Concrete and Calcium Silicate Masonry Units*, ASTM C 744 (ref. 6).

Ground-face units are ground to achieve a smooth finish which reveals the natural colors of the aggregates. Often, specific aggregates will be used to enhance the appearance.

For more information on surface finishes, see TEK 2-3A *Architectural Concrete Masonry Units* (ref. 1).

Figure 7—Examples of Surface Finishes Available For Concrete Masonry Units (clockwise from bottom left: split face with three scores; single score ground face; glazed corner unit; ground face; ground face; single score glazed ; split face; ground face; split face; center: eight-ribbed split face)

REFERENCES

1. *Architectural Concrete Masonry Units*, TEK 2-3A, National Concrete Masonry Association, 2001.
2. *Shapes and Sizes Directory*, National Concrete Masonry Association, 1995.
3. *Standard Methods of Sampling and Testing Concrete Masonry Units and Related Units*, ASTM C 140-01a$^{\varepsilon 1}$. American Society for Testing and Materials, 2001.
4. *Standard Specification for Concrete Building Brick*, ASTM C 55-01a. American Society for Testing and Materials, 2001.
5. *Standard Specification for Load-Bearing Concrete Masonry Units*, ASTM C 90-01a. American Society for Testing and Materials, 2001.
6. *Standard Specification for Prefaced Concrete and Calcium Silicate Masonry Units*, ASTM C 744-99. American Society for Testing and Materials, 1999.

Provided by:

NATIONAL CONCRETE MASONRY ASSOCIATION
13750 Sunrise Valley Drive, Herndon, Virginia 20171
www.ncma.org

To order a complete TEK Manual or TEK Index, contact NCMA Publications (703) 713-1900

ROMTEC POLY VAULT: 750 GALLON

The following is an example of the Romtec Poly Vault included in the design of this building.

Specifications

- Patented Design: US Patent No. 4231482
- Materials: Reinforced LLDPE – Polyethylene

	ASTM Test	Nom. Value
Density	D-488	0.938 g/cm3
Tensile strength at yield	D-638	3,000 psi
Elongation at break	D-638	> 1,000
Tensile modulus of elasticity	D-638	80,000 psi
Flexural modulus	D-790	112,000 psi
Heat deflection temp @ 66psi	D-648	144 deg. F
Vicat softening temp	D-1525	248 deg. F
Impact Strength @ -40 degrees	ARM Std.	70 ft. lb. 190 mil
Envir. stress crack resistance	D-1693	> 1,000

- Material Thickness: 3/8” average
- Mid-point Dimensions: 84” x 64”
- Volume/usage: 11,000 uses (approx)
- Weight: 340 lb
- Fittings: Cleanout: 24” dia. x 6 ½” high (cover included)
  Riser Stack: 20- 5/8” x 16-1/2” o.d. oval x 6” high
  Vent Stack: 12” o.d. x 6-1/2” high

STEELCRAFT®

F16 AND F14-SERIES FLUSH FRAMES

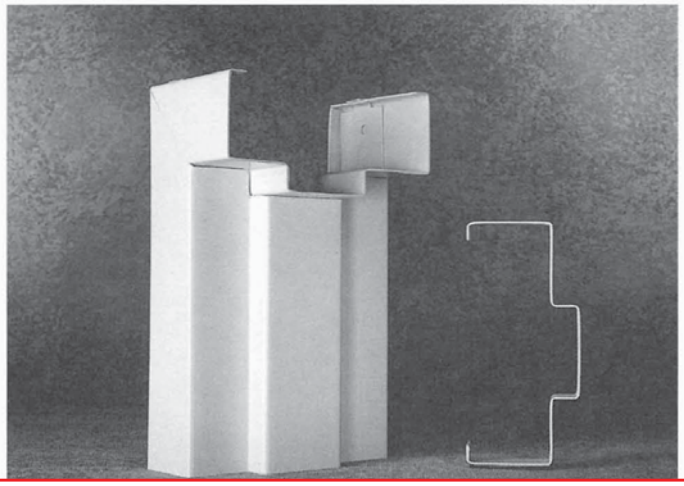

FRAMES SHALL BE POWDER COATED BLACK

FEATURES AND BENEFITS:

Steelcraft F-Series Flush Frames offer the following unique features, which enhance long term functionality and durability:

1. **Die-mitered corner connections** (head/jamb) Standard corners insure attractive, tight and closed miters.
2. **Patented universal hinge preparations** allow for easy field conversion from standard weight (.134) hinges to heavy weight (.180) hinges.
3. **Adjustable base anchors** allow for installation adjustment when the floor is not level.
4. **Rubber silencers** are factory installed.
5. **Factory applied baked on rust inhibiting primer** in accordance with ANSI A250.10.

ABOUT THE PRODUCT:

The F16 and F14-Series 3-Sided Flush Frames are designed for heavy and extra-heavy duty applications in both commercial and institutional buildings. They can be installed in both interior and exterior locations, and in virtually all types of buildings and wall constructions. These frames are to be installed as part of the wall framing sequence. They can be specified and/or supplied as either KD (knock-down) for field assembly prior to installation, or SUA (set-up and welded) for installation as a pre-welded unit.

APPLICATIONS:

The F-Series Frames are typically used in the following types of wall constructions:

Wall Construction	Application	Typical Wall Anchors
Masonry	wrap or butted	Wire masonry
Existing masonry	butted	Bolted through soffit
Wood stud	wrap	Lock-in wood stud anchor
Steel stud	wrap	Lock-in steel stud anchor

SPECIFICATION COMPLIANCE:

1. Overall frame construction for the Steelcraft F16 and F14-Series Flush Frames meet the requirements of ANSI A250.8-1998 (commonly referred to as SDI-100).
2. Hardware preparations and reinforcements are in accordance with ANSI A250.6-1997. Locations are in accordance with ANSI/DHI A115.

FIRE RATINGS:

The F-Series Frames meet the broadest fire rating requirements. They are listed for installations requiring compliance to both negative pressure testing (ASTM E152 and UL-10B) and positive pressure standards (UBC 7-2 and UL-10C). Refer to the "Fire Rated" section of the Steelcraft Spec Manual for particular listings.

Steel Thickness	Opening	Usage Frequency[1]	Applications
14 gage (1.7mm)	Interior & Exterior	Extra-heavy to Maximum duty	• 16 & 14 gage steel doors
16 gage (1.3mm)	Interior & Exterior	Heavy to Extra-heavy duty	• 20, 18 & 16 gage steel doors • Commercial grade wood doors
Steel Type	**Opening**		**Applications**
CRS	Mainly Interior		• Typical building conditions
Galvannealed[2]	Mainly Exterior		• Used in locations with high humidity and/or weather exposure

MATERIAL:

F-Series Frames are supplied from either 14 gage (1.7mm) or 16 gage (1.3mm) steel. Depending on environmental and usage conditions, the steel can be either cold rolled steel (CRS) or galvannealed. All frames are supplied with a factory applied baked on primer for ultimate field paint adhesion.

[1] Usage frequency is based on ANSI A250.8-1998
[2] Reinforcements for galvannealed frames are also galvannealed

Details are subject to change without prior notice.

American Laminators
Duco Lam
PO Box 297, Drain, OR 97435
(541) 836-2191

HANDLING AND STORAGE INSTRUCTIONS FOR FiRP® GLULAM BEAMS

TRANSIT DAMAGE

TRUCK – When material is delivered by truck, damages should be acknowledged in writing to the driver.

RAIL - If material has been damaged on transit, do not unload until the inspector for the delivering carrier has been contacted and acknowledges the damage and presents you, the consignee, with a written inspectors report. It is the responsibility of the consignee to file damage claims against the carriers.

ERECTION AND INSTALLATION

A competent erector shall erect the timber systems with appropriate resources for the erection of this system. The erector shall properly brace system and maintain member alignments until all necessary components are in place. Bracing system design and implementation are the responsibility of the erector.

Minor installation corrections: trimming, moderate reaming or drilling, and use of drift pins shall be considered a usual expense of erection. American Laminators / Duco-Lam shall be notified immediately at the discovery of any error in materials, workmanship, or shop drawings. No correction shall be attempted without approval from American Laminators / Duco-Lam.

Limiting exposure to moisture during jobsite storage and erection can minimize seasoning checks. Avoiding rapid changes in wood moisture levels during construction and building operation can further minimize checking. Temperature and humidity should be regulated to provide gradual seasoning of members during the first year of operation. Longer if timbers are of large volume, or have been exposed to unusual wetting during construction.

- over -

TABLE 1

DESIGN VALUES FOR STRUCTURAL GLUED-LAMINATED SOFTWOOD TIMBER STRESSED PRIMARILY IN BENDING[1,2,3]

			Bending About X-X Axis (Loaded Perpendicular to Wide Faces of Laminations)					
			Extreme Fiber in Bending[6]		Compression Perpendicular to Grain		Shear Parallel to Grain (Horizontal)[7]	Modulus of Elasticity[8]
			Tension Zone Stressed in Tension	Compression Zone Stressed in Tension	Tension Face	Compression Face		
Combination Symbol	Species[4] Outer/Core	Balanced/ Unbalanced[5]	F_{bx}^{+} (psi)	F_{bx}^{-} (psi)	$F_{c\perp x}$ (psi)		F_{vx} (psi)	E_x (10^6 psi)
1	2	3	4	5	6	7	8	9
Western Species								
EWS 24F-V4	DF/DF	U	2400	1850	650	650	265	1.8
EWS 24F-V8	DF/DF	B	2400	2400	650	650	265	1.8

Bending About Y-Y Axis (Loaded Parallel to Wide Faces of Laminations)				Axially Loaded			Fasteners		
Extreme Fiber in Bending[9]	Compression Perpendicular to Grain	Shear Parallel to Grain (Horizontal)[7,10]	Modulus of Elasticity[8]	Tension Parallel to Grain	Compression Parallel to Grain	Modulus of Elasticity[8]	Specific Gravity for Dowel-Type Fastener Design		
							Top or Bottom Face	Side Face	
F_{by} (psi)	$F_{c\perp y}$ (psi)	F_{vy} (psi)	E_y (10^6 psi)	F_t (psi)	F_c (psi)	E_{axial} (10^6 psi)	SG		Combination Symbol
10	11	12	13	14	15	16	17	18	
1450	560	230	1.6	1100	1650	1.7	0.50	0.50	EWS 24F-V4
1450	560	230	1.6	1100	1650	1.7	0.50	0.50	EWS 24F-V8

Glulam Design Specification

We have field representatives in many major U.S. cities and in Canada
who can help answer questions involving APA trademarked products.
For additional assistance in specifying engineered wood products, contact us:

APA HEADQUARTERS
7011 So. 19th St. • Tacoma, Washington 98466 • (253) 565-6600 • Fax: (253) 565-7265

www.apawood.org

PRODUCT SUPPORT HELP DESK
(253) 620-7400 • E-mail Address: help@apawood.org

Form No. Y117E/Revised August 2008

APA

REPRESENTING THE ENGINEERED WOOD INDUSTRY

GABLE WINDOW

The following is an example of the Romtec gable window included in the design of this building.

Specifications

- Angle Iron Frame – 2” X 2” X 1/8”
- Pre-assembled steel frame
- Polycarbonate is 1/8” thick
- Translucent Pebble Finish
- Powder coated, standard color is black
- See plans for dimensions

ROMTEC TONGUE & GROOVE DECKING

The following is an example of the Romtec tongue & groove decking included in the design of this building.

Specifications

- 2x6 decking
- Kiln dried select deck
- Douglas fir
- Finish seal or paint is installer supplied

5.03.2 EXTERIOR

Data sheets to follow.

PABCO® Roofing Products
Exceptional People. Remarkable Products.

MENU

COLOR: MAPLE RED

Home » Product Info

Tahoma™

3-TAB SHINGLES

Tahoma™ is a versatile 3-tab asphalt shingle that provides a simple, uniform appearance. Available in eight colors, Tahoma is compatible with most architectural styles and exterior home colors. Tahoma features a 30-year fully transferable Limited Warranty* and 60 mph Limited Wind Warranty*. Tahoma is also UL classified to meet ASTM D3462 Fiberglass Shingle Standard and UL 790 Class A Fire Resistance Standard.

For a roof that is simply versatile, choose Tahoma.

Design: 3-Tab
Warranty Type: 30 Years
Available with Scotchgard™?: No
*See PABCO®'s Limited Shingle Warranty for details, limits, and conditions.
**Scotchgard™Algae Resistant Roofing System is not available in all markets

Technical Specifications

Tahoma

Wind Warranty:
60 MPH Limited Wind Warranty*
Fire Resistance: Class A
Solar Reflective: No
Shingle Length: 39-3/8"
Shingle Width: 13-1/4"
Exposure: 5-5/8"
Offset Measure: 5-5/8"
Coverage in Linear Feet:
Linear Feet / Pallet:

Shingles / Square: 65
Bundle / Square: 3.00
Bundles / Pallet: 64
Squares / Pallet: 21.33
Pounds / Square (Nominal): 210
Weight / Bundle - (Nominal):
Pallet Weight - lbs (Nominal): 4,500

Product Documentation

Tahoma Cut Sheet
Cut sheet for Tahoma 3-Tab Shingles

Product Line Card
The Line Card is a list of all PABCO Roofing shingle products, accessories, specifications, and colors.

UL Certification
PABCO Roofing's UL Online Certifications

Tahoma Directions for Application
Directions for application for Tahoma 3-Tab Shingles

Tahoma Nailing Instructions
Nailing instructions for Tahoma 3-Tab Shingles

Material Safety Data Sheet
PABCO Roofing Material Safety Data Sheet

Channels

Homeowners

Siding

Phillips maintains a wide variety of siding for new constructions and home improvements. *Quality samples are located at Phillips locations.* Special orders are made and routine deliveries are standard at each store.Phillips Building Supply offers many types of sidings including vinyl and plywood. **Georgia Pacific** and **James Hardie** Siding Products, and other reputable brands which offers numerous advantages for builders.

- The Warmth of Wood, the Durability Consumers Demand
- 50-Year Limited Transferable Warranty
- Resists Moisture Damage
- Low Maintenance
- Won't Crack, Rot or Delaminate
- Withstands Termite Attack
- Non-Combustible

James Hardie® Siding Products

SIDING IS PRE-PRIMED. SIDING TO BE PAINTED ON-SITE BY INSTALLER. PAINT IS INSTALLER SUPPLIED.

Eight main styles of siding can be chosen from the Hardie product line.

Select Cedarmill Lap Siding

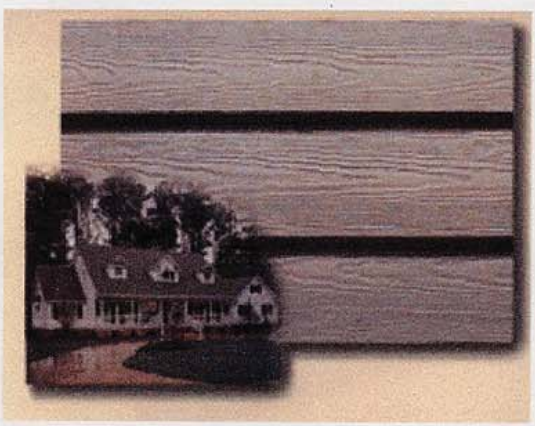

Beaded Cedarmill Lap Siding

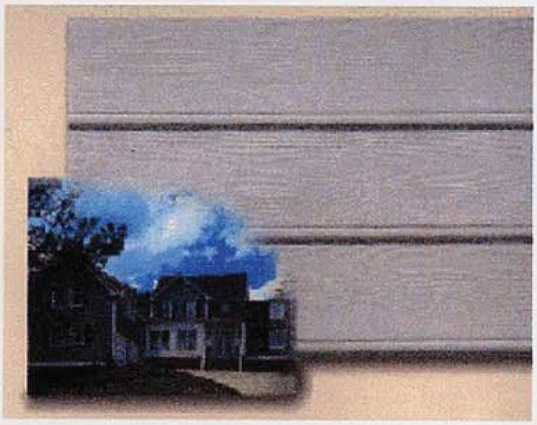

Colonial Roughsawn Lap Siding

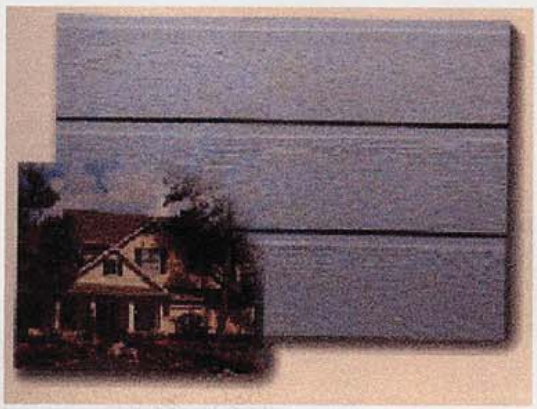

Stucco Vertical Siding

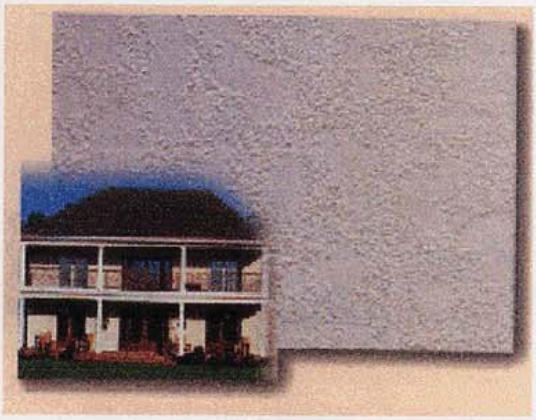

Click to see the rest of the Hardie product line and more siding products..

ROMTEC POLY PIPE

The following is an example of the Romtec Poly Pipe included in the design of this building.

Specifications

- 12” High Density Polyethylene (HDPE)

POLY PIPE

ExxonMobil Chemical

PAXON™

High Density Polyethylene

7004 Crosslinkable Rotational Molding Resin

Description

7004 is a UV-stabilized, 35 mesh crosslinkable HDPE powder intended for use in rotational molding. Properly molded parts made with 7004 show exceptional environmental stress cracking resistance, thermal resistance, and notched failure resistance. The high flow base resin promotes rapid melting and outstanding part fill during processing while the finished part exhibits high performance characteristics reflecting crosslinked molecular weight. This resin is available in various colors, plus natural.

Applications

- High ESCR, outdoor storage tanks, vessels
- Marine fuel tanks
- Recreational vehicle fuel tanks
- Large refuse containers

Additive Package	Stabilizer
7004	Long term UV stabilizer

Molded Properties[2]	Test Based On	Unit SI (English)	Typical Value[1]
Tensile Strength at Yield	ASTM D 638	MPa (psi)	21 (3,000)
Elongation at Break	ASTM D 638	%	> 300
Tensile Modulus of Elasticity	ASTM D 638	MPa (psi)	793 (115,000)
Flexural Modulus[3]	ASTM D 790	MPa (psi)	689 (100,000)
Impact Brittleness Temperature	ASTM D 746	°C (°F)	< -118 (< -180)
Crosslink Potential	ExxonMobil Method		2.5
Environmental Stress Crack Resistance[4]	ASTM D 1693	hrs	F_0 > 1,000
Notched Izod	ASTM D 256	joules/m (ft-lb/in)	907 (17)
Notched Izod (-40°C)	ASTM D 256	joules/m (ft-lb/in)	240 (4.5)
Thermal Properties			
Vicat Softening Temperature	ASTM D 1525	°C (°F)	121 (250)
Heat Deflection Temperature, 66 psi	ASTM D 648	°C (°F)	66 (150)
Processing[5]			
Bulk Density	ASTM D 1895	kg/m^3 (lbs/ft^3)	370 (23)

1. Values are typical and should not be interpreted as specifications. Values may change with future development..
2. All molded properties were measured on rotomolded specimens.
3. Method1, Procedure A (1'x3'x0.125'), Tangent calculation.
4. Condition A and B, 10% Igepal CO-630.
5. Measurement based on resin as supplied.

Revised January 2006

Romtec supplies this door without window

Powder Coat Color: Black

ABOUT THE PRODUCT:

The SL20 and SL18 Series **Square Edge** Flush Doors are designed to meet the architectural requirements for full flush doors. Refer to Section 11 (Architectural) for specifications and the selection and usage guide of the appropriate door constructions.

This door construction combines the strength and dimensional stability of steel with the structural integrity of the laminate core. The continuous bonding of core to steel face sheets provides an attractive, flat door, free of face welding marks. Tests have proven that the construction employed has integral high resistance to impact damage, low thermal conductivity and high STC ratings.

To meet application, specification and performance requirements, the SL Series Door offers options including sizes, glass light designs and hardware preparations.

SL-Series Doors are 1-3/4″ (45mm) thick, with **Square Edges**.

INSTALLATION:

1. Installation shall conform to the published Steelcraft installation instructions, ANSI A250.11-2001 (formerly SDI 105) *Recommended Erection Instructions for Steel Frames and HMMA 840*.

2. Fire Rated Assemblies must be in accordance with NFPA Pamphlet 80. *The Authority Having Jurisdiction* is the final authority on issues related to the installation and use of installed Fire Rated Doors.

FEATURES AND BENEFITS:

Steelcraft's SL Series Doors offer the following standard features, which enhance performance and durability:

1. **Core Systems** that enhance the structural integrity of the door:
   - **Honeycomb (standard)** – 1″ (25mm) cell kraft honeycomb configuration that increases structural integrity while reducing overall weight
   - **Polystyrene (optional)** – enhanced thermal performance

2. **Full Height, Epoxy Filled Mechanical Interlock Edges** provide structural support and stability the full height of the door edges.

3. **Standard Hinge Preparations** for 4-1/2″ (114mm) x .134″ (3.3mm) standard weight or .180″ (4.7mm) heavy weight hinges.

4. **14 Gage [0.067″ (1.7mm)] Inverted Top and Bottom Channels** provide stability and protection for the top and bottom edges from abuse.

5. **Square Hinge and Lock Edges** allow for non-handed inventory control for local distribution.

6. **Recessed Dezigner™ Glass Trim** provides a clean, neat and flush finish with the door surface.

7. **Factory Applied Baked-On Rust Inhibiting Primer** paint in accordance with ANSI A250.10-1998 (R2004).

SPECIFICATION COMPLIANCE:

1. Door construction for Steelcraft SL Series doors meets the requirements of ANSI A250.8-2003 (SDI 100).

2. Hardware preparations and reinforcements are in accordance with ANSI A250.6-2003. Locations are in accordance with ANSI/DHI A115 unless otherwise stated.

FIRE RATINGS:

SL Series Doors meet the broadest fire rating requirements. They are listed for installations requiring compliance to both neutral pressure testing (ASTM E152 and UL-10B) and positive pressure standards (UBC 7-2 and UL-10C).

NOTE: Any other color specified for the Door & Frame other than standard Black is considered an Upgrade and will incur additional cost and lead-time

Rigid Honeycomb

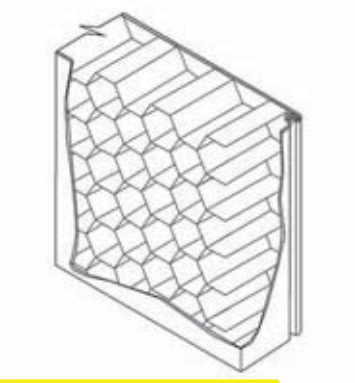

Standard Laminated Honeycomb Core

- 1″ (25mm) cell, 99 pound Kraft honeycomb
- Honeycomb surfaces sanded for maximum adhesion
- Impregnated with phenolic resin (resists mildew and vermin)
- Laminated to both face sheets with contact adhesive
- Assembled door is run through high pressure pinch rollers, achieving ultimate bond

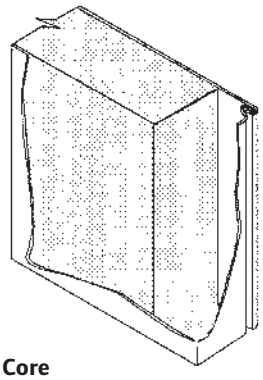

Optional Polystyrene Core

- 1 pound (453.6g) per ft^3 density slab
- Laminated to both face sheets with contact adhesive
- Labeled applications

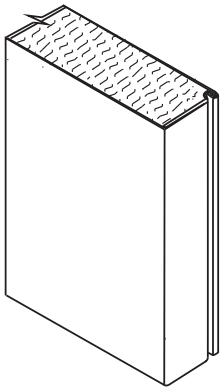

Standard Premium Edge Construction

- Beveled hinge & lock edges
- Full height mechanical interlock with epoxy adhesive
- Visible edge seam standard

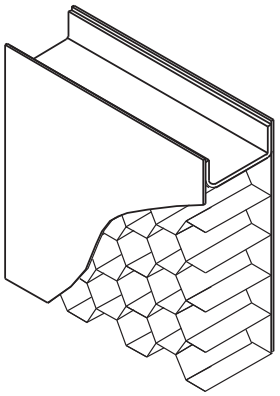

Standard Rigid 14 Gage End Channel Construction

- 14 gage inverted galvannealed top & bottom channels
- Projection welded to both face sheets
- Optional 24 gage galvannealed top caps

DOOR APPLICATION AND USAGE

Series	Steel Thickness	Opening	Usage Frequency	
SL20	20 Ga (0.8mm)	Interior - Cold Rolled Steel	Standard Duty	Light Commercial applications with minimal use and abuse
SL20	20 Ga (0.8mm)	Exterior - Galvannealled Steel		
SL18	18 Ga (1.0mm)	Interior - Cold Rolled Steel	Heavy Duty	Heavy Commercial & Institutional applications with high use
SL18	18 Ga (1.0mm)	Exterior - Galvannealled Steel		

STANDARD HARDWARE PREPARATIONS

Typical hardware applications shown. Refer to section 8 for more details.

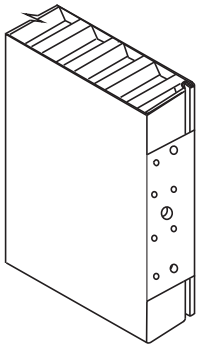

Mortise Hinge
7 Gage hinge reinforcement, reversible hinge fillers supplied

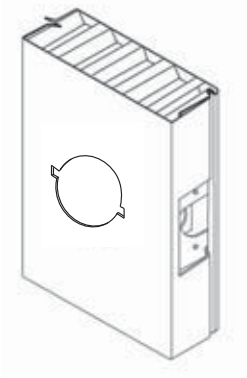

161 Lock
61L Available

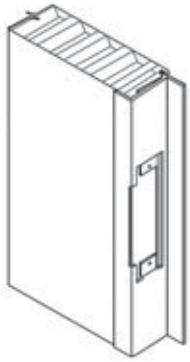

Inactive Leaf ASA Strike Prep with Astragal attached

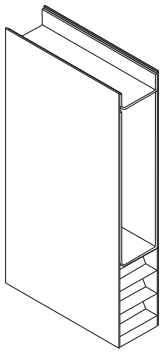

Optional 14 Gage Closer Reinforcement

Standard: mortised and reinforced for

- **Template hinge preparations** for 4-1/2″ x .134″ standard weight hinges or for 4-1/2″ x .180″ heavy weight hinges. Butt hinge preparations are cut through for non-handed function; spacer plates are furnished for field installation and handing.
- The cylindrical 161, 61L and mortise 86 lock preps are the most commonly used active leaf preparations. The 4 7/8 (124mm) strike prep is the most commonly used inactive leaf preparation.
- Optional reinforcements for surface Closers are available.
- Limited hardware applications are available.

Door Sizes and ANSI A250.8 Conversions

Steelcraft product selection for SL Series Doors has been matched to ANSI/SDI Level and Model designations.

- In accordance with ANSI A250.8, core material is not specific to the level or model designations. Core material selection is specified based on preference and application.
- Recommended minimum frame gage also applies to the frequency of operation of the opening.

Series	ANSI A250.8 - SDI 100			Edge Construction Options	Maximum Sizes		Recommended Gage of Frame
	Level	Model	Description		Single	Pair	
Level 1 - Light Commercial							
SL20	1	1	Full Flush	Visible	3'-0" x 8'-0" 914mm x 2438mm	6'-0" x 8'-0" 1829mm x 2438mm	18 Gage [0.042" (1.0mm)] 16 Gage [0.053" (1.3mm)]
Level 2 - Heavy Duty Commercial & Institutional							
SL18	2	1	Full Flush	Visible	4'-0" x 8'-0" 1219mm x 2438mm	8'-0" x 8'-0" 2438mm x 2438mm	16 Gage [0.053" (1.3mm)]

DOOR EDGE CONSTRUCTION:

Optional Edge Seams available in the SL Series doors:

- SL - Standard feature includes visible edge seams with full height interlocked edges.

Standard Visible Seam

SL Series Visible Seam Features

- Full height mechanical interlock
- Interlock filled with epoxy adhesive
- Visible edge seam

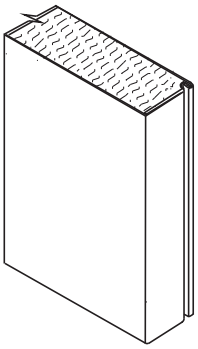

1150

Product Information

Material: - Stainless Steel w/ Stainless Steel components ANSI K51071F

Single Acting
Square Center

Product Specifications

Sizes: - 4 1/2" x 4" (114 x 102 mm)
- 4 1/2" x 4 1/2" (114 x 114 mm)

Finishes: - US32, US32D

Notes: - For maximum versatility use all spring hinges or a combination of spring hinges and ball bearing hinges. Do NOT use plain bearing hinges.
- Full spring tension may not be required on all hinges
- Strong wind conditions, drafts, carpeting drag, twisted/misaligned frames, or weatherstripping on doors may require additional spring hinges.

Product Size Options

Hinge Size (inches)	Hinge Size (mm)	Gauge of Metal	Hole Count	Screw Size (Machine)	Screw Size (Wood)
4-1/2 x 4	114 x 102	0.134	8	1/2 x 12 -24	1-1/4 x 12
4-1/2 x 4 -1/2	114 x 114	0.134	8	1/2 x 12 -24	1-1/4 x 12

Series 1 3/4" (45mm) Door	Size	Rcm Max Door wt. (lbs)	Spring Hinge	Ball Bearing Hinge
1150	4 1/2 x 4 & 4 1/2 x 4 1/2	70	1	2
1150	4 1/2 x 4 & 4 1/2 x 4 1/2	115	2	1
1150	4 1/2 x 4 & 4 1/2 x 4 1/2	150	3	---
1250	4 1/2 x 4 & 4 1/2 x 4 1/2	70	1	2
1250	4 1/2 x 4 & 4 1/2 x 4 1/2	115	2	1
1250	4 1/2 x 4 & 4 1/2 x 4 1/2	150	3	---
1256	4 1/2 x 4 1/2	115	2	1
1255	4 1/2 x 4 1/2	115	2	1

HAGER COMPANIES
One Family. One Brand. One Vision.™

ECBB1101NRP

Product Information

Description:
- ANSI A2112 (Brass)
- ANSI A5112 (Stainless steel)
- Two ball bearings
- Non-removable pin with button tip and plug
- Only available in 4 -1/2" x 4 -1/2" (114 mm x 114 mm)
- Fasteners are AMS x 1/2 WS
- For use on medium weight doors or doors requiring medium frequency service

Five Knuckle
Ball Bearing
Standard Weight

Product Specifications

Fasteners: - All machine and half wood

Material:
- Brass w/ Stainless Steel pin ANSI A2112
- Stainless Steel with Stainless Steel pin ANSI A5112

Finishes: - US15, US26, US26D, US32D

HAGER COMPANIES
One Family. One Brand. One Vision.™

198S

Product Information

NFPA Notes: - NFPA 80 Standards - 6.4.5 Protection Plates 6.4.5.1 - Factory installed protection plates shall be installed in accordance with the listing of the door. 6.4.5.2 - Field installed protection plates shall be labeled and installed in accordance with their listing. 6.4.5.3 - Labeling shall not be required where the top of the protection plate is not more than 16" (406mm) above the bottom of the door.

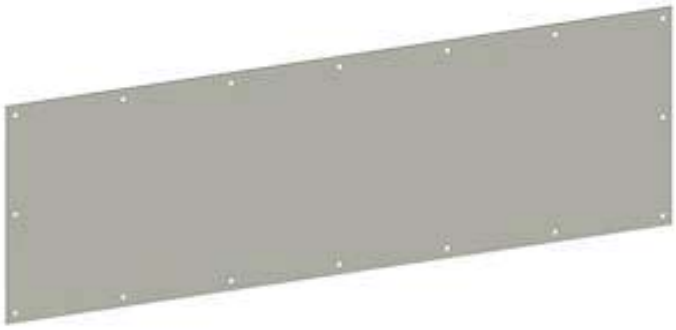

Door Protection Plate
0.038" gauge stainless steel

Product Specifications

Gauge: - 0.038" (1 mm)

Materials: - Stainless Steel

Finishes: - US32D

Order: - Plates are sized on even inches. Odd size available and priced to next larger size.

Options:
- UL listed for US32 and US32D*
*Must specify UL stamp - Self -adhesive tape available on all plates
- Spanner head screws
- Torx head screws
- Round Corners
- Wrap around side and bottom return
- 0.125" material

Certification: - Meets ANSI A156.6 for J101 Metal Armor Plate, J102 Metal Kickplate, and J103 Metal Mop Plate

c UL us LISTED

TECHNICAL DATA

FROM

Anemostat®

DOOR PRODUCTS

A MESTEK COMPANY

P.O. BOX 4938 • 1220 WATSONCENTER ROAD
CARSON, CA 90745-4206
(310) 835-7500 • FAX (310) 835-0448
e-mail: door@anemostat.com • website: www.anemostat.com

AFDL

INVERTED Y
NON-VISION LOUVER

AFDL-T

TRANSOM LOUVER
CORE ONLY

NOT FIRE RATED

DETAIL DRAWING

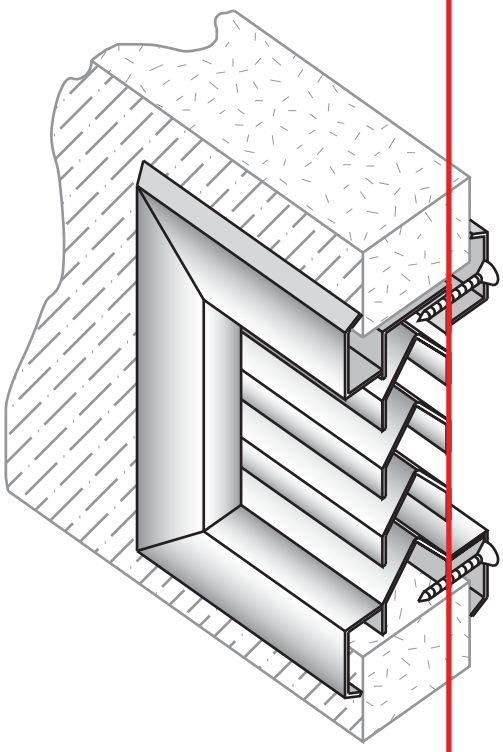

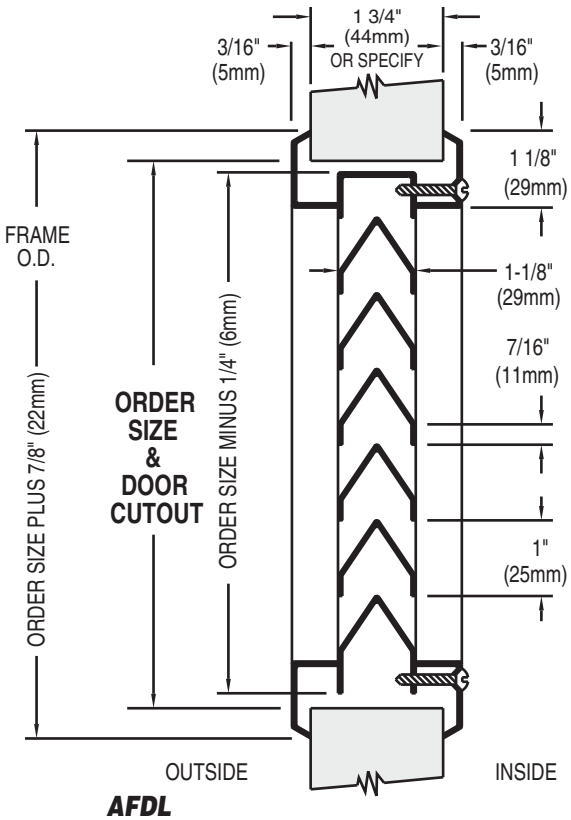

AFDL

FOR USE IN TRANSOMS
SIDELITES OR BORROWED LITES.

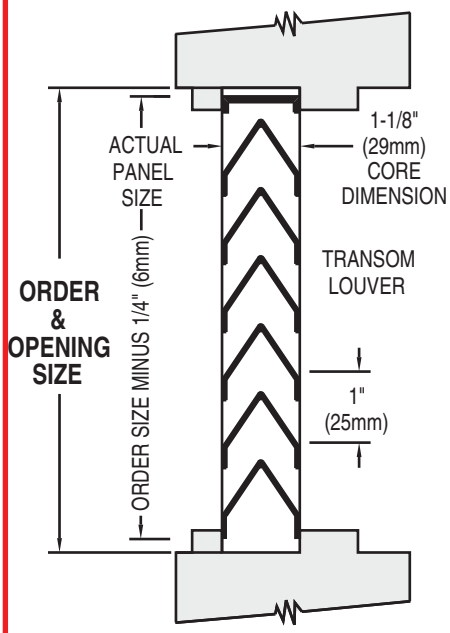

AFDL-T

Anemostat manufacturing dimensions ±1/32 (1mm)
Actual dimensions are nominal and may vary
based on component manufacturers tolerances.

STANDARD PRODUCT FEATURES

- **MATERIAL:** 18 GA. (1.2mm) Cold Rolled Steel - Frame.
  22 GA. (.75mm) Cold Rolled Steel - Louver Blades.
- **FINISH:** Grey Primer, Beige or Bronze Baked Enamel.
- **INSTALLATION:** Our top selling louver is preferred because of its ease of installation. Use #8x1" (25mm) phillips screw that fastens auxiliary frame to the louver core, thru the cutout in the door, thus eliminating the need to drill holes in the door for thru bolts. This method saves time and installation labor and leaves the corridor side of the frame free of fasteners for added security, and a cleaner aesthetic appearance.
- **DOOR THICKNESS:** For 1 3/4" (44mm) Door 1-3/8"(35mm), 2" (50mm) and 2 1/8" (54mm) are available. Louver core may be offset.
- **AESTHETICS:** Tight mitered corners, no visible welds, countersunk mounting holes and corridor side of frame free of fasteners make for a clean, streamlined appearance
- **USES:** Anywhere air flow is required thru a door.
- **FREE AIR FLOW:** 50% Free Area.

OPTIONAL FEATURES

- **MATERIAL:** #304 or #316 Stainless Steel, #4 Finish(Satin), Galvanized (Coil, Hot Dipped or Zinc Plated), Mill Finish or Anodized Aluminum (#5052 Alloy), 16 gauge (1.5mm) Cold Rolled Steel or Stainless Steel.
- **FINISH:** Custom Baked Enamel Colors (as per sample paint chip, supplied by customer).
- **FASTENERS:** Special Security Screw Fasteners, See Page 14, this section.
- **SPECIALS:** Fractional sizes (frame dimension is increased to accomodate odd size).
  Mesh insect screens are loose, attached or framed.
  (Galvanized, Aluminum, Charcoal Aluminum, Stainless Steel.)
  For detail drawings see pages 12 and 13 this section.

FIRE RATINGS

- **AFDL and AFDL-T are not fire rated.**

- ***NOTE:*** For Exterior use, High Humidity or Salt Air application, product must be Galvanized or Stainless Steel.

Job Name & Location	Submitted by

HAGER COMPANIES
One Family. One Brand. One Vision.™

3500 Series Lever

Product Information

Applications:
- Standard duty commercial
- No exposed mounting screws
- Non-handed
- Conventional cylinder or Small Format Interchangeable Core housing available

Notes:
- Blank plate projection is 13/16" (21 mm) for Functions 25 and 79
- Interchangeable Cores are not available on Apollo knob

Grade 2 Cylindrical Lever

Product Specifications

Certifications: - BHMA Certified ANSI A156.2, Series 4000, Grade 2 - ADA Compliant ANSI A117.1 Accessibility Code - UL/cUL Listed for all functions up to 3 hours "A" label single doors - ANSI A250.13 Severe Windstorm Component - UL10C Positive Pressure Rated - UL10B Neutral Pressure Rated - Lifetime warranty

Exposed Trim: - Knobs: wrought brass or stainless steel - Levers: cast zinc - Rose: wrought brass or stainless steel

Lock Chassis: - Heavy gauge steel, zinc dichromated for corrosion resistance - Free wheeling (levers only) - Removable thru -bolts - Failure to install thru -bolts and removable screw posts voids BHMA certification, UL Rating, and Warranty.

Rose Diameter: - 3-11/32" (85 mm) levers; 3" (76 mm) knobs

Keys: - Two operating keys supplied per lock

Cylinders: - Brass - Keyed Different - C Keyway - Other keying options, including keyed 6 -pin, available from the factory - Interchangeable Core - Brass 6 & 7 pin - Uncombinated & Combinated - Drilled 6-pin, Keyed 5 -pin - Standard - Small Format Interchangeable Core housing available - SFIC uncombinated or combinated, brass 6 - or 7-pin sold separately

Door Thickness: - Levers: 1 -3/8" - 2" (35 mm - 51 mm) - Knobs: 1 -3/8" - 1-3/4" (35 mm - 54 mm)

Backset: - 2-3/4" (70 mm) - Standard - 2-3/8" (60 mm) - Optional - 3-3/4" (94 mm) - Optional - 5" (128 mm) - Optional

Latchbolt: - 1/2" (13 mm) Throw - Stainless steel - 1-1/8" x 2 -1/4" (25 mm x 57 mm) Faceplate for 2 -3/4" (70 mm) backset - Deadlocking latchbolt prevents manipulation when door is closed; keyed functions only - 1" x 2 -1/4" (25 mm x 57 mm) Faceplate for 2 -3/8" (60 mm) backset

Strikes: - 3935 ASA 1 -1/4" x 4 -7/8" (32 mm x 124 mm) strike - Standard

Functions:
- 50 Office
- 53 Entry
- 70 Classroom
- 73 Corridor
- 79 Keyed Communicating
- 80 Storeroom
- 10 Passage
- 40 Privacy
- 25 Exit Only
- 17 Dummy
- 27 Back-to-Back Dummy

Finishes: - US3, US4, US10, US10B, US26, US26D (Levers only) - US3, US32D (Knobs only)

Options: - Lead Lined (Levers Only) - Tactile Knurling (Levers Only) - Split Finish - Additional latchbolts and strikes available

Standard door prep: - 2-1/8" diameter (cross bore) - Latch hole: 1" diameter (edge bore)

Lever options: - Apollo knob; Archer, August, Withnell levers

2942

Product Information

Magnetic Lock:	- ANSI/BHMA A156.23 Grade 1, Compliant - Designed for system integrators, distributors, installers, and building owners presently using low cost import or private label brand access control hardware - Easy to install - Provides superior, less obtrusive appearance compared to stainless steel epoxy sealed magnetic locks - full monitoring standard - Quick mount assembly reduces installation time
Use:	- For perimeter and interior door security and access control

Magnet Locks

Product Specifications

Holding Force:	- 1200 lbs (545 kg)
Includes:	- Door and lock status outputs for remote monitoring and system application needs
Lock:	- 10-1/2" (l) x 2 -7/8" (h) x 1 -5/8" (d) - 266 (l) x 73 (h) x 41 (d) mm
Armature:	- 7-5/16" (l) x 2 -3/8" (h) x 1/2" (d) - 186 (l) x 38 (h) x 13 (d) mm
Standard Features:	- Door status, lock status and bi -color LED - Interlocking quick mount assembly - Adjustable mounting bracket with choice of self -drilling and tapping mounting screws or machine screws - Wire access chamber with terminal block - Dual voltage f12/24 VDC - Clear anodized aluminum
Circutry/Wiring:	- PC board with voltage and current spike protection, instant release anti -residual magnetism circuit, terminal block for power input and status outputs
Voltage:	- 12/24 VDC, field selectable
Lock Status:	- SPDT, 2 amp @ 30 VDC
Door Status:	- SPDT, 250 mA @ 30 VDC
Accessories:	- 2-679-0100 Top jamb kit - 2-679-0102 Glass Door Kit - 2-679-0104 Adjustable Angle Bracket - 2-679-0106 - Angle Bracket (cut to fit 2941) - 2-679-0107 - Stop Filler Plate (field cut for 2941) - 2-679-0108 - Stop Filler Plate (field cut for 2941)

HAGER COMPANIES
One Family. One Brand. One Vision.™

2903

Product Information

Description:
- Provides power for Fail Safe or Fail Secure locking devices and interface with building alarm controls, card readers, keypads, and other door controls.
- * Not suitable for use with Electric Latch Retraction exit devices

Product Specifications

Certifications:
- UL Listed

Features:
- Filtered and regulated 24 VDC constant voltage
- 2 AMP load capacity
- Over voltage/short circuit protection
- Overload protection
- Surge suppression for locking devices
- Interface relay
- Adjustable time delay feature

HAGER COMPANIES
One Family. One Brand. One Vision.™

2977

Product Information

Description:
- Request to exit switch
- Heavy duty vandal resistant and weatherized
- No moving parts
- Bi-color status illumination
- Designed for indoor, outdoor, commercial, and industrial egress applications
- Constructed of stainless steel and utilizing piezoelectric technology
- Ideal for harsh or high traffic conditions
- Weather resistant
- Ensures superior performance in virtually any environment
- Switch features integrated output timer adjustable for 1 -30 seconds
- Red and green can be selected to show relay ON or OFF status
- Can be used to control an automatic door, electromechanical lock, strike, or magnetic lock
- May be tied into the remote bypass (Request to Exit) input of an access control system
- Can be used to shunt an alarm system to allow egress from a secure area

Exit Switch

Product Specifications

Features:
- Vandal resistant stainless steel piezoelectric button
- 3/32" (2 mm) stainless steel vandal resistant faceplate
- Selectable bi -color illumination status (Relay OFF - red, green, or none) (Relay ON - red, green, or none)
- Adjustable timer output, 1 -30 seconds

Models:
- 2977 - 1 Gang

Input Voltage:
- 12/24 AC/DC

Current:
- Idle - 30 mA
- Active - 60 mA

Output:
- SPDT dry contact, 3 amp @ 30 VDC

Button Switch:
- 1 billion cycle life expectancy

Relay:
- 100,000 cycles @ 3 A 30 VDC life expectancy
- 200,000 cycles @ 1.5 A 30 VDC life expectancy

Switch:
- Operating environment of -40 degrees F to 160 degrees F (-40C to 70C)

Dimensions:
- 4-3/4" (h) x 3" (w) x 1 -1/8" (d)
- 121 (h) x 76 (w) x 29 (d) mm

2-679-0611 | 2-679-0612

Product Information

Description: - 2-679-0611 (white PIR egress sensor)
- 2-679-0612 (black PIR egress sensor)

PIR Egress Sensor

Product Specifications

Input: - 12 or 24 VAC/DC @ 26 mA max

Contact: - 2 SPDT dry, 2 amp @ 30VDC

Operating Temp: - 20 degree F to 120 degree F (-29 degrees C to 49 degrees C)

Dimensions: - 1-1/2 (h) x 6 -1/4 (w) x 1 -1/2 (d) in -38 (h) x 149 (w) x 38 (d) mm
- Lifetime on hardware components

Voltage: - UL Listed 294
- Access control system unit
- Unlocks doors automatically when persons approaching door are detected
- Complies with national fire and building code requirements for access controlled egress doors
- Code compliant Fail Safe mode releases locks when power to PIR sensor is interrupted

400U-L2
400U-LT2

400-SN
400-RMB

Audible and Visual Annunciators

Stainless steel single gang or narrow frame mount annunciator assemblies. Dual voltage 12/24VDC.

400U-L2 One red and one green LED, 1 gang

400U-LT1 One tri-color LED, illuminates red, green and yellow, 1 gang

400U-LT2 Two tri-color LED's, illuminates red, green and yellow, 1 gang

400U-RMB Buzzer, 1 gang, specify 12VDC or 24VDC

400NU-RMB Buzzer, narrow 1.75 " wide, specify 12VDC or 24VDC

400U-SN 85 dB siren, 1 gang 3-8VDC, 18mA

400NU-SN 85 dB siren, narrow 1.75 " wide 3-28VDC, 18mA

CB401-AU
CB402-AU

CB401-B
CB402-B

Communicating Bathroom Systems Controls

For a common single bathroom shared by two patient rooms or dormitory rooms, the CB400A controls provides privacy and ensures that both doors are locked only when the bathroom is occupied and unlocked when the bathroom is not occupied. The CB400B controls provide emergency access by facility staff. Both doors unlock when signalled by the fire life safety system.

For communicating bathroom systems with EMLocks

CB401-AU The CB401-AU is located inside the bathroom. Depressing the button locks both doors for privacy. Pressing the button again unlocks both doors ensuring both doors are unlocked when unoccupied.

CB401-B The CB401-B emergency door release (2 required) is located outside the bathroom above or adjacent to the door. The illuminated push switch lens indicates the doors are locked. Depressing the push switch unlocks both doors.

Additional system requirements: Two SDC EMLocks 1581-DPS 650lbs holding force or 1571-DPS 1200lbs holding force; 631RF CR access control power supply with fire alarm release input.

For communicating bathroom systems with Hi/Tower® electrified locksets

CB402-AU The CB402-A is located inside the bathroom. Depressing the push switch locks both doors on the outside only. Doors are always unlocked on the inside for uninhibited egress. Exiting either door causes both doors to unlock.

CB402-B CB402-B emergency door release (2 required) is located outside the bathroom above or adjacent to the door. The illuminated push switch lens indicates the doors are locked. Depressing the push switch unlocks both doors.

Additional system requirements: Two SDC HiTower® locksets Z7250-REX or Z7850-DS ; 631RF LR access control power supply with fire alarm release input. Power transfer hinge loop required with Z7850-DS and Z7250-REX.

10TD

14-2

Timers

10TD Mini Timer

The SDC 10TD is a field adjustable 1-60 second miniature time delay relay designed for timed unlocking of electric locks. The 10TD Mini Timer is small enough to fit in a single gang box or inside the door frame.

Contact: SPDT dry, 2 Amps @ 30VDC

Voltage: 12/24V AC/DC @ 50mA

Trigger Input: N.O. (normally open)

Dimensions: 2.25"H x 1.5"W x 0.75"D (57.2 x 38.1 x 19.1mm)

14-2 Seven Day, Skip-A-Day Timer

The SDC 14-2 is a compact, field programmable, 7 day skip-a-day timer module recommended for automatic timed locking and unlocking of one door or all doors on the same circuit. The timer may be programmed to skip unlocking on selected days or weekends. The timer may also be installed in a power supply

Contact: SPDT dry, 16 Amps @ 30VDC

Voltage: 12V AC/DC or 24V AC/DC please specify

Dimensions: 2.375"H x 2.375"W x 1.25"D (60.3 x 60.3 x 32mm)

5.03.3 FIXTURES

Data sheets to follow.

POLYETHYLENE TOILET RISER

Description

The Romtec Toilet Riser is a single piece molded fixture for use in vault toilets. It can be installed in any new or existing vault toilet facility. The smooth polyethylene material cleans easily, will not support bacterial growth, is impervious to chemicals and resists vandalism. The toilet riser is supplied with a heavy-duty, high impact polypropylene seat and lid with mounting hardware.

Specifications

	ASTM Test	Nom. Value
Density	D-1505-85	0.938 g/cm3
Tensile strength at yield	D-638-84	2,575 psi
Elongation at break	D-638-84	400%
Tensile modulus of elasticity	D-638-84	80,000 psi
Flexural modulus	D-790	100,000 psi
Heat deflection temp @ 66psi	D-648	138 deg. F
Vicat softening temp	D-1525	248 deg. F
Impact Brittleness Temp	D-746-79	<-180 deg.
Dart Impact (-40 deg C)	ARM Std. (B)	60 ft-lb. 125mil
Envir. stress crack resistance	D-1693-70	> 1,000 HRS.

- Patented Design: US Patent No. 5983415
- Materials: Polyethylene, White
- Riser Dimensions:

  Overall: 18” high, 5” flange, 20-5/8” x 16 ½” oval

  Avg. thickness of material: 1/8”

  Weight: 23 lbs, including seat and lid

- Stainless Steel Safety Riser Bar sold separately unless purchased through Romtec building package.

POLYETHYLENE URINAL

Description

The Romtec Urinal is a single-piece molded fixture that can be installed in any permanent or portable restroom facility that drains to a holding tank or underground vault. The cross-linked polyethylene material is impervious to chemicals, resists vandalism and does not support bacterial growth.

Specifications

	ASTM Test	Nom. Value
Density	D-1505-85	0.944 g/cm3
Tensile strength at yield	D-638-84	3,000 psi
Elongation at break	D-638-84	400%
Tensile modulus of elasticity	D-638-84	80,000 psi
Flexural modulus	D-790-84A	100,000 psi
Heat deflection temp @ 66psi	D-648-82	138 deg. F
Vicat softening temp	D-1525-82	248 deg. F
Impact Brittleness Temp	D-746-79	<-180 deg. F
Dart Impact (-40 deg C)	ARM Std. (B)	60 ft-lb. 125mil
Envir. stress crack resistance	D-1693-70	> 1,000 HRS.

- Weight: 3 lbs.
- Avg. thickness of material: 1/8”
- Dimensions:

  Overall: 17-3/8” high, 9 ¾” wide, 8-1/8” deep

  Opening: 4 ½” (top) 7 ½” (bottom) wide, 11 ½” high

  Drain Connection: ¾” i.d.; 1” o.d.; 1 ½” long

Installation

The urinal can be mounted on the interior wall of a vault toilet or portable toilet facility. A ¾” inside diameter flexible pipe can be attached to the urinal drain with a stainless steel hose clamp and slope towards the underground vault or holding tank. Mounting fasteners, flexible drain pipe and hose clamp are not supplied.

LITHONIA LIGHTING®

Catalog Number	
Notes	Type

Outdoor General Purpose

Mini-Wall Pack

Dusk-to-Dawn

Compact Fluorescent

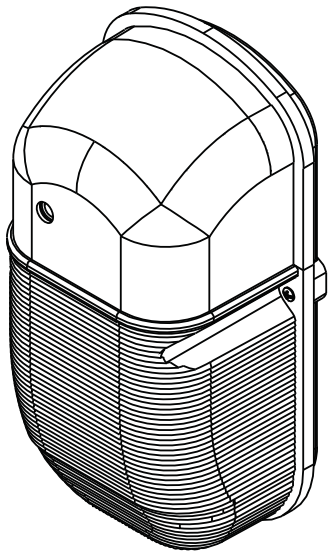

FEATURES & SPECIFICATIONS

INTENDED USE

Provides general illumination for outdoor use in residential and light commercial applications. Ideal for entryways, walkways, side yards, patios, and commercial buildings creating an inviting exterior space as well as providing safety and security.

ATTRIBUTES

Dusk-to-dawn photocell automatically turns on at dusk and off at dawn for convenience and energy savings. The durable polycarbonate housing is offered in bronze or white. High-impact polycarbonate refractor is UV-stablized to prevent yellowing.

Standard with electronic ballast (120 volt, 60 Hz). Starts instantly down to -13°F (-26°C).

Includes (1) 42W GX24q 4-pin base 4100K triple tube compact fluorescent lamp.

For use with non-dimmable switches only.

All mounting hardware included.

LISTING

CUL listed to US and Canadian safety standards and suitable for wet locations. ENERGY STAR® qualified.

WARRANTY

Guaranteed for two years against mechanical defects in manufacture. (Excludes lamp)

DIMENSIONS

Lamp Configuration	Model Number	Number of Lamps	(A) Width inches (cm)	(B) Height inches (cm)	(C) Extension* inches (cm)
	OWP3 42F	(1) 42W GX24q 4-pin base compact (TTT)	5-3/4" (14.6)	11" (27.9)	4-15/16" (10.9)

* Maxium extension from wall

All dimensions are in inches (centimeters)

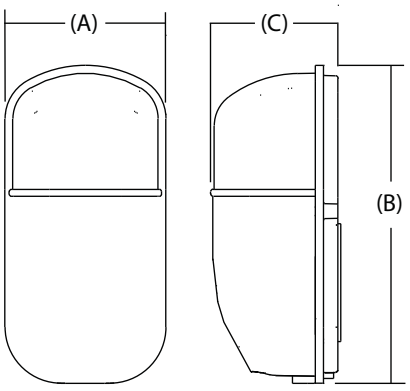

ORDERING INFORMATION

Example: **OWP3 42F 120 P LP BZ**

Choose the boldface catalog nomenclature that best suits your needs and write it on the appropriate line. Order accessories as and replacement parts separate catalog numbers.

OWP3 42F — Model Number

OWP3 42F (1) 42W GX24q 4-pin 4100K triple tube compact fluorscent lamp **Included**

120 — Ballast/Voltage

120 120 volt residential electronic ballast (standard)

P — Features

P Dusk-to-Dawn photocell

LP — Lamp

LP Lamp included

Finish

BZ Bronze
WH White

Accessories/Replacement parts

CF42TRT41 4-PIN M6 42W GX24q 4-pin 4100K triple tube compact fluorescent lamp

PHOTOMETRICS

CANDELA DISTRIBUTION

	0	45	90	135	180	Ave	Lumens
0	110	110	110	110	110	110	
5	124	120	114	106	102	114	11
15	150	152	131	90	67	121	34
25	176	185	145	67	33	125	58
35	202	215	160	43	18	132	83
45	230	240	181	25	11	141	110
55	268	261	209	14	8	155	139
65	301	278	235	9	5	169	168
75	324	289	258	7	1	181	191
85	333	294	273	7	1	187	204
90	329	294	277	7	1	188	
95	319	287	279	9	1	185	202
105	289	263	267	15	0	172	182
115	244	219	231	19	0	146	145
125	190	156	169	11	0	107	96
135	110	105	93	9	0	64	51
145	70	90	63	14	0	51	32
155	64	71	48	13	0	41	19
165	37	34	26	11	2	23	7
175	0	2	9	6	0	4	1
180	0	0	0	0	0	0	

ZONAL LUMEN SUMMARY

Zone	Lumens	% Lamp	% Fixture
0° - 30°	103.4	3.2	6.0
0° - 40°	186.5	5.8	10.8
0° - 60°	435.2	13.6	25.1
0° - 90°	997.8	31.2	57.6
90° - 120°	527.8	16.5	30.5
90° - 130°	623.4	19.5	36.0
90° - 150°	706.4	22.1	40.8
90° - 180°	733.2	22.9	42.4
0° - 180°	1731.0	54.1	100.0

LUMINAIRE EFFICIENCY: 54.1%

CIE CLASSIFICATION: General Diffuse

SPACING CRITERIA(0-Deg): 2.7
SPACING CRITERIA(90-Deg): 2.3
SPACING CRITERIA(180-Deg): 0.6

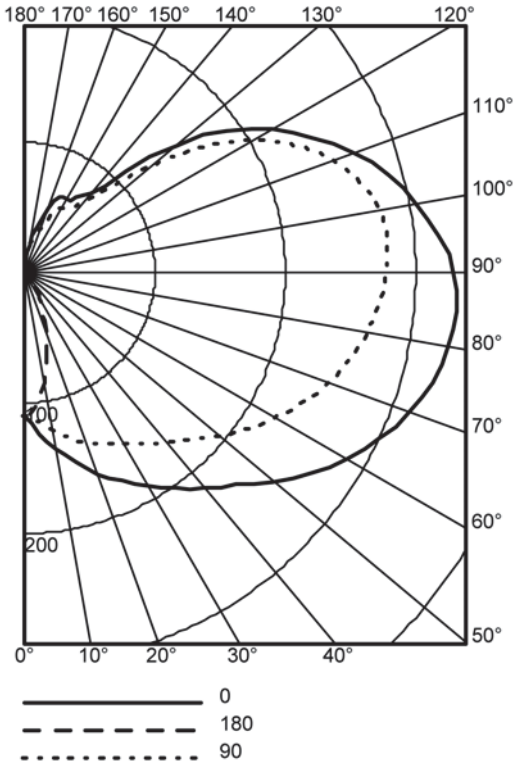

SINGLE LUMINAIRE PERFORMANCE

Task Height: 2.5ft.

		50% beam - 85.5°		10% beam - 132.6°	
Mounting Height	Inital FC Center Beam	Diameter	FC	Diameter	FC
8.0	3.6	10.2	1.8	25.1	0.4
10.0	2.0	13.9	1.0	34.2	0.2
12.0	1.2	17.6	0.6	43.3	0.1
14.0	0.8	21.3	0.4	52.4	0.1
16.0	0.6	25.0	0.3	61.5	0.1

COEFFICIENTS OF UTILIZATION

pf	20%														
pc	80%				50%			30%			10%			0%	
pw	70%	50%	30%	10%	50%	30%	10%	50%	30%	10%	50%	30%	10%	0%	
0	59	59	59	59	47	47	47	40	40	40	34	34	34	31	
1	51	47	44	41	37	35	32	31	29	27	25	24	23	20	
2	45	39	35	31	31	27	25	25	23	21	20	19	17	14	
3	40	34	28	24	26	22	19	22	19	16	17	15	13	11	
4	37	29	24	20	23	19	16	19	16	13	15	13	11	08	
5	33	26	20	17	20	16	13	16	13	11	13	11	09	07	
6	31	23	18	14	18	14	11	15	12	09	12	09	07	06	
7	28	20	15	12	16	12	10	13	10	08	11	08	06	05	
8	26	18	14	10	14	11	08	12	09	07	10	07	06	04	
9	24	17	12	09	13	10	07	11	08	06	09	07	05	04	
10	23	15	11	08	12	09	06	10	07	05	08	06	04	03	

AVERAGE LUMINANCE (cd/m2)

	0°	90°	180°
45°	14146	13278	677
55°	15808	15026	472
65°	17570	17074	292
75°	19297	19544	60
85°	20893	22310	63

Calculations based on IES File Luminous Area:
3.96 in. W x 3.0 in. L x 6.0 in. H

Consumer Products
One Lithonia Way, Conyers, GA 30012
Phone: 800-748-5070 Fax: 770-860-3903
In Canada: 160 Avenue Labrosse, Point-Claire, P.Q., H9R 1A1
www.lightahome.com

Features, Benefits and Functions

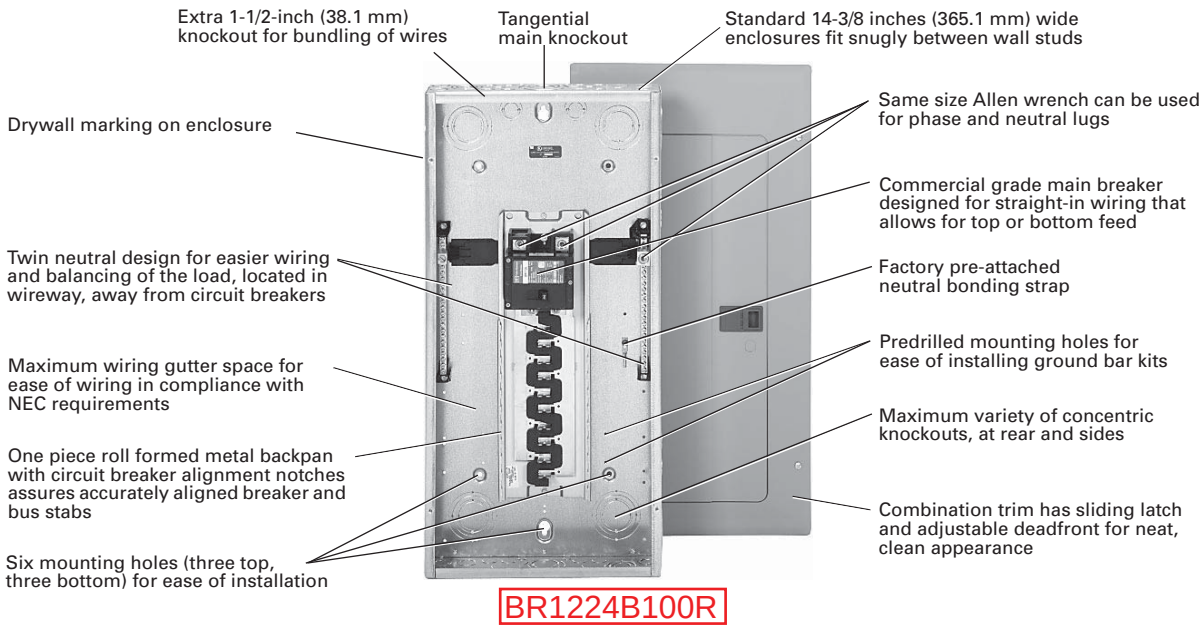

Product Selection

Table 3-64. BR Loadcenter Selection Chart

Service	■ Single-phase, three-wire, 120/240V AC	■ Three-phase, four-wire, 208Y/120V AC ■ Three-phase, three-wire, 240V AC delta
Short Circuit Current Rating	■ 10,000 AIC: All single- and three-phase loadcenters 70 through 225 amperes, 8 to 42 circuits. ■ 22,000 AIC: All convertible loadcenters using 125 amperes rated Type BRH main breakers or selected factory installed 125 ampere rated Type BRH main breaker.	■ 25,000 AIC: All convertible and factory installed single-phase loadcenters rated 150 and 200 amperes using Type BWH main breakers.
Main Breaker/Main Lug Loadcenters	Single-Phase ■ Main Breaker: 100, 125, 150, 200, 225, 400, 600 amperes. ■ Main Lugs: 70, 125, 150, 200, 225, 400, 600 amperes.	Three-Phase ■ Main Breaker: 100, 125, 150, 200, 225, 400, 600 amperes. ■ Main Lugs: 100, 125, 150, 200, 225, 400, 600 amperes.
Convertible Loadcenters	■ Main Breaker: Single-phase up to 200 amperes and three-phase up to 225 amperes ■ Main Lugs: Single-phase up to 200 amperes and three-phase up to 150 amperes	
Branch Breakers	■ Types BR, BRH, and BRH: 10 to 125 amperes. One-, two-, and three-pole. Selected amperages available in switching duty, HACR, shunt trip, and high magnetic setting. ■ Type GFCB: 15 to 50 amperes. One- and two-pole ground fault breakers. ■ Types BJ, and BJH: 125 to 225 amperes Two- and three-pole. ■ Type BD Twin: 10 to 50 amperes Two of one-pole. Take one 1-inch (25.4 mm) space.	■ Type BQ and BQC Multibreaker: 15 to 30 amperes. Two of two-pole or one two-pole and two one-pole. Takes two 1-inch (25.4 mm) spaces. ■ Type BRW: 15 to 30 amperes. Two-pole water heater breakers. ■ Type BRSN: 15 to 30 amperes. Two-pole switching neutral breakers. ■ Type BR 15 to 100 amperes. Two-pole, 240V AC delta breakers. ■ BR-AFCI arc fault circuit interrupter.
Enclosures	■ NEMA Type 1 indoor. ■ NEMA Type 3R outdoor.	■ Meets or exceeds UL requirements for indoor or outdoor applications
Loadcenter and Breaker Accessories	■ Branch Circuit Breaker Auxiliary components. Hold Down Kits. Handle ties. Lockoffs. Lockdogs. ■ Complete Line of Ground Bar Kits 5, 10, 14, and 21 circuit, some with additional #2/0 lugs. Each terminal will accommodate: (3) #14 – #10 Cu/Al or (1) #14 – #4 Cu/Al ■ Main and Sub-feed Lugs 125, 150, 225 amperes — two- and three-pole. ■ Shunt Trips	■ Surge Protection Single-phase plug-on surge protector. Single-phase bottle type surge protector. Three-phase bottle type surge protector. Single-phase whole home surge protector. ■ Universal Rainproof Conduit Hubs Group One: 3/4, 1, 1-1/4, 1-1/2, 2 inches (19.1, 25.4, 31.8, 38.1, 50.8 mm) Group Two: 2, 2-1/2, 3 inches (50.8, 63.5, 76.2 mm) Adapter plate.
Bussing	■ Tin-plated aluminum as standard. ■ Some copper bus panels available.	

Single-Phase — Main Circuit Breaker Loadcenters
10,000/25,000 Amperes Interrupting Capacity

Table 3-70. Single-Phase, 3-Wire — 120/240 Vac — Factory Bonded Split Neutral

Main Breaker Type	Main Ampere Rating	Maximum Number 1-Inch (25.4 mm) Space	Maximum Number 1-Inch (25.4 mm) Circuits	Enclosure Type	Box Size	Wiring Diagram Figure Number	Wire Size Range Cu/Al 60°C or 75°C for Main Breaker	Loadcenter Catalog Number with Combination Cover ①	Price U.S. $
BR 10 kAIC	100 100	20 16	20 24	Indoor Indoor	C2 C1	68 69	#4 – 1/0	**BR2020B100** **BR1624B100**	
BWH 25 kAIC	150 200 200 200	30 20 30 40	30 40 40 40	Indoor Indoor Indoor Indoor	G1 D1 G1 L1	70 71 72 70	#2 – 300 kcmil #2 – 300 kcmil	**BR3030B150** **BR2040B200** **BR3040B200** **BR4040B200**	

① Combination style covers may be used in surface or flush applications.

Note: All main circuit breaker loadcenters are listed for use as service entrance equipment. Loadcenters are factory bonded for service entrance applications. Remove bonding strap for separate neutral and ground bars for sub-feed applications

Table 3-71. Single-Phase 3-Wire — 120/240 Vac — Insulated/Bondable Neutral

Main Breaker Type	Main Ampere Rating	Maximum Number 1-Inch (25.4 mm) Spaces	Maximum Number 1-Inch (25.4 mm) Circuits	Enclosure Type	Box Size	Wiring Diagram Figure Number	Wire Size Range Cu/Al 60°C or 75°C for Main Breaker	Loadcenter Catalog Number with Combination ② or NEMA Type 3R Cover	Price U.S. $
BR 10 kAIC	100	8 10 10 10 12 12	16 20 20 20 12 20	Indoor Indoor Indoor Outdoor Indoor Indoor	B1 A1 A1 B2R B2 B2	17 65 65 59 5 19	#4 – 1/0 ③	**BR816B100** **BR1020B100S11** **BR1020B100F11** **BR1020B100RF** ④⑤ **BR1212B100** **BR1220B100**	
		12 16 16 16 20 30	24 16 20 24 24 30	Outdoor Indoor Indoor Outdoor Outdoor Indoor	B2R C1 C1 C1R C3R ⑥	17 5 60 24 10 ⑥	⑥	**BR1224B100R** ⑤ **BR1616B100** **BR1620B100** **BR1624B100R** ⑤ **BR2024B100R** ⑤ ⑥	
	125	16 20 20	24 24 24	Indoor Indoor Outdoor	C1 C1 C3R	24 10 10	#4 – 2/0	**BR1624B125** **BR2024B125** **BR2024B125R** ⑤	
BRH ⑦ 22 kAIC	100	20	24	Indoor	C2	10	#2/0 – 300 kcmil	**BR2024H100** ⑦	
BWH ⑧ 25 kAIC	150	8 16 20 20 20 20 24 30 30	16 30 30 30 40 40 30 30 40	Outdoor Indoor Indoor Outdoor Indoor Outdoor Indoor Outdoor Indoor	C3R C4 C4 D1R D1 D1R G1 G1R G1	18 25 26 26 29 29 27 28 30	#2 – 300 kcmil	**BR816B150RF** ④⑤ **BR1630B150** **BR2030B150** **BR2030B150R** ⑤ **BR2040B150** **BR2040B150R** ⑤ **BR2430B150** **BR3030B150R** ⑤ **BR3040B150**	
	200	4 8 16 20 24 30 40	8 16 32 40 40 40 40	Outdoor Outdoor Indoor Outdoor Indoor Outdoor Outdoor	8R C3R C4 D1R G1 G1R L1R	46 18 29 29 61 30 28	#2 – 300 kcmil	**BR48B200RF** ④⑨⑩ **BR816B200RF** ④⑤ **BR1632B200** **BR2040B200R** ⑤ **BR2440B200** **BR3040B200R** ⑤ **BR4040B200R** ⑤	
	225	42 42	42 42	Indoor Outdoor	L2 L2R	31 31	#1 – 250 kcmil	**BR4242B225** **BR4242B225R** ⑤	

② Combination style covers may be used in surface or flush applications.
③ Wire range size for BR1020B100SP is #6 – #1 Cu/Al.
④ Includes through-feed lugs for both phase and neutral conductors.
⑤ Rainproof panels are furnished with hub closure plates. For rainproof hubs, refer to **Page 3-63**.
⑥ See Copper Bus Offering, **Page 3-55**.
⑦ 22 kAIC series combination rating is obtained when Types BD, BR, BQ, BQC and GFCB 10 kAIC branch breakers are used in series with Type BRH main breaker.
⑧ 25 kAIC series combination rating is obtained when Types BD, BR, BQ, BQC and GFCB 10 kAIC branch circuit breakers are used in series with Type BWH main breaker.
⑨ Supplied with adapter plate to use DS Group1 hubs on **Page 3-63**. If 2.50-inch (63.5 mm) hub is needed, remove adapter and use ARP00007CH25 hub.
⑩ Neutral is bonded — suitable for service entrance only — cannot be converted for sub-feed application.

Note: All main circuit breaker loadcenters are listed for use as service entrance equipment and are shipped with neutral bonding strap preattached. The maximum rating of the panel is the main circuit breaker rating when used as service entrance equipment. Ground bar kits priced separately. See **Page 3-64**.

Box Sizes . . . . . **Pages 3-77** through **3-79**
Discount Symbol **22C**

5.03.4 ACCESSORIES

Data sheets to follow.

STAINLESS STEEL DISPENSERS!

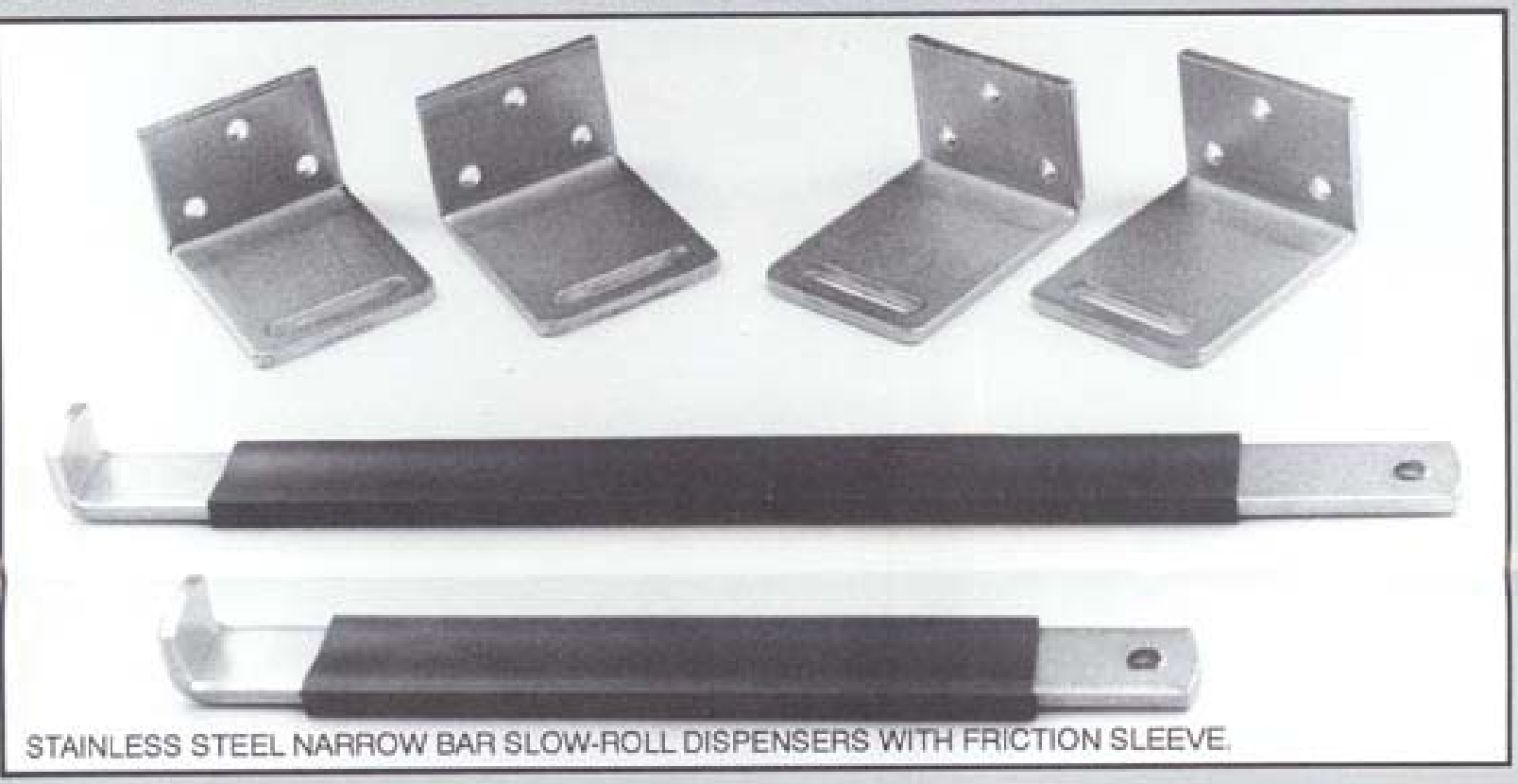

STAINLESS STEEL NARROW BAR SLOW-ROLL DISPENSERS WITH FRICTION SLEEVE.

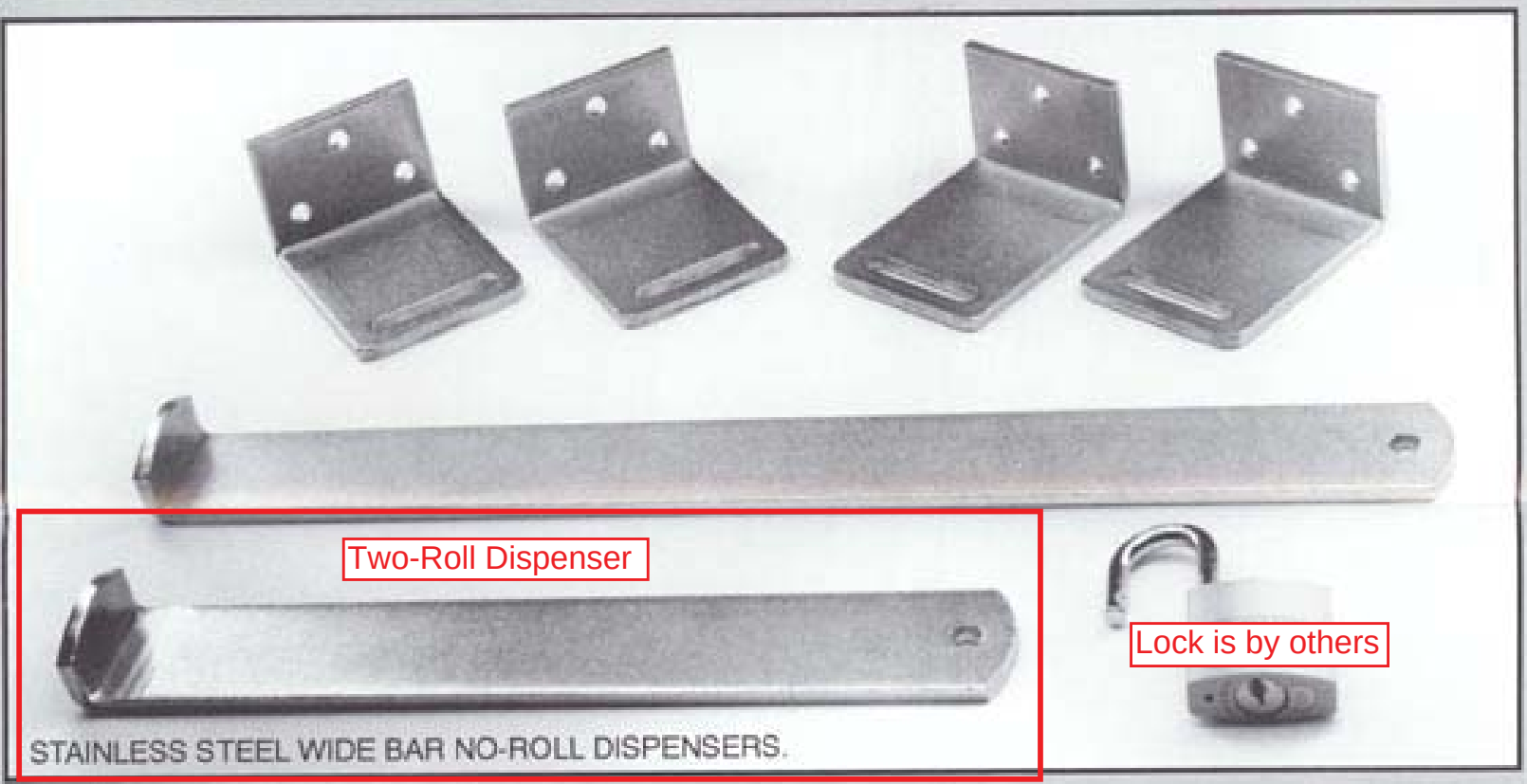

STAINLESS STEEL WIDE BAR NO-ROLL DISPENSERS.

NEW FACILITIES, swimming pools, beaches, and marinas, or anywhere corrosion and rust are a special problem can benefit from the proven excellence of stainless steel. These new dispensers are identical to the standard ASLIN DISPENSERS, except made of industrial finished STAINLESS STEEL. This is not a thin-gauge sheet metal version, but is made from solid 1/4 inch thick 304 stainless steel. Better than enamel, zinc or chrome plating, these dispensers will not chip, peel, or flake — the advantage of a superior material! With use, and abuse on the rise, installing the toughest and best dispenser available will look better, reduce maintenance, and pay long-term dividends for many years to come!