KITSAP COUNTY CONTRACT NO. 2016–108

DUWE'IQ STORMWATER TREATMENT WETLAND

FUNDED IN PART BY THE WASHINGTON DEPARTMENT OF ECOLOGY
DEPARTMENT OF ECOLOGY GRANT #WQC–2016–KICOPW–00066
KITSAP COUNTY, WASHINGTON
SECTION 16, TOWNSHIP 25N, RANGE 1E, W.M.

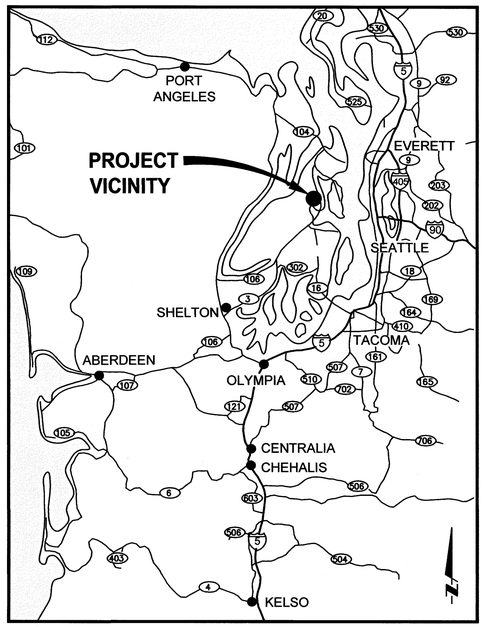

VICINITY MAP
NO SCALE

SHEET INDEX

SHEET NO.	SHEET TITLE
1	VICINITY MAP, LOCATION MAP AND SHEET INDEX
2	NOTES, LEGEND, & ABBREVIATIONS
3	EXISTING CONDITIONS & SURVEY CONTROL
4	TREATMENT WETLAND SITE PREP AND TESC PLAN
5	TESC NOTES AND DETAILS
6	TREATMENT WETLAND GRADING PLAN
7	POINT TABLES
8	TREATMENT WETLAND SECTIONS
9	TREATMENT WETLAND LONGITUDINAL PROFILE
10	SOUTH COLLECTION AND CONVEYANCE PLAN
11	NORTH COLLECTION AND CONVEYANCE PLAN
12	SPILLWAY PLAN AND PROFILE
13	PLANTING PLAN
14	PLANTING NOTES AND DETAILS
15	DRAINAGE DETAILS
16	DRAINAGE DETAILS
17	OUTLET CONTROL STRUCTURE DETAILS
18	CULVERT AND SPILLWAY DETAILS AND SECTIONS
19	LOG WEIR DETAILS
20	ANCHORED LOG AND HABITAT STRUCTURE DETAILS
21	FENCE AND GATE DETAILS

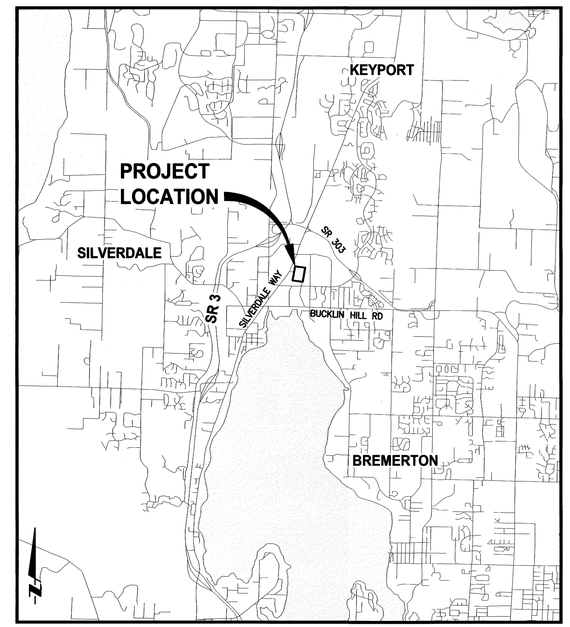

LOCATION MAP
NO SCALE

APPROVED FOR CONSTRUCTION

02 MARCH 2016
DATE

DAVID TUCKER, P.E.
ASSISTANT DIRECTOR, UTILITIES

UTILITY CONTACT INFORMATION

PUGET SOUND ENERGY
6522 KITSAP WAY
BREMERTON, WA 98312
CONTACT: TOM BROBST
TELEPHONE: 360.475.7020

CENTURYLINK
611 – 6TH STREET
BREMERTON WA 98337
CONTACT: ROYCE KLEIN
TELEPHONE: 360.478.5930

CASCADE NATURAL GAS
PO BOX 539
BREMERTON, WA 98312
TELEPHONE: 360.633.6614
CONTACT: RICK COY

COMCAST
1225 SYLVAN WAY
BREMERTON, WA 98310
CONTACT: JIM LECOMPTE
TELEPHONE: 253.896.5688, 360.340.1288

SILVERDALE WATER DISTRICT
5300 NW NEWBERRY HILL
SILVERDALE, WA 98383
CONTACT: NOLAN CORPUZ
TELEPHONE: 360.447.3500

BID SET
FEBRUARY 29, 2016

Parametrix
4660 KITSAP WAY, SUITE A
BREMERTON, WASHINGTON 98312
T. 360.377.0014 F. 360.479.5961
www.parametrix.com

811 Know what's below. Call before you dig.

BOARD OF COMMISSIONERS:
ROBERT GELDER
CHARLOTTE GARRIDO
EDWARD E. WOLFE

DIRECTOR OF PUBLIC WORKS
ANDREW NELSON, P.E.

KITSAP COUNTY
DEPT. OF PUBLIC WORKS
614 DIVISION STREET MS–26
PORT ORCHARD, WA 98366
TEL:(360) 337–5777 FAX:(360) 337–4867

DUWE'IQ STORMWATER TREATMENT WETLAND
VICINITY MAP, LOCATION MAP, AND SHEET INDEX
KITSAP COUNTY, WASHINGTON
SECTION 16, TOWNSHIP 25N, RANGE 1E, W.M.

DATE 02/29/16
SHEET 1 OF 21

FILENAME: U:\SCS\Projects\Clients\1578-KitsapCo\133-1578-139 DuweiqSWTrtmntWetland\995vce\CADD\DWG\PS01578135-C01-C.dwg
DATE: 2/29/2016 TIME: 2:20 PM
PLOTTED BY: cerojas LAYOUT: C01
XREF'S: XPS01578135-TB COVER

LEGEND

DESCRIPTION	EXISTING	PROPOSED
BOULDER		
TELEPHONE RAISER	TR	
POWER VAULT	P	
POWER PANEL	P	
POWER JUNCTION BOX		
STANDARD LIGHT		
TRANSFORMER		
TELEPHONE PANEL	T	
POWER VAULT	P	
CONIFEROUS TREE		
CATCH BASIN		
CLEAN OUT		
SIGN		
SEWER MANHOLE		
TELEPHONE RISER	TR	
WATER METER		
FIRE HYDRANT		
WATER VALVE		
POST INDICATOR VALVE		
STORM DRAIN MANHOLE		
DECIDIOUS TREE		
ROOF DRAIN		
WATER IRRIGATION VALVE		
FIRE DEPARTMENT CONNECTION		
POWER POLE		
GAS VALVE		
GAS METER		
POWER METER		
BOLLARD/FENCE POST		
DELINEATED WETLANDS		
ORDINARY HIGH WATER MARK (OHWM)	OHWM	
TREE (LARGE CALIPER), CANOPY NOT SHOWN FOR CLARITY		

DESCRIPTION	EXISTING	PROPOSED
CHANNELIZATION LINE		
CENTERLINE		
ROCKERY LINE		
GRAVEL EDGE		
EDGE OF PAVEMENT		
VEGETATION LINE		
GUARDRAIL		
CHAINLINK FENCE		
WIRE FENCE		
CURB		
SEWER UNDERGROUND UTILITY	SS	PIPE SIZE / PIPE MATERIAL
POWER UNDERGROUND UTILITY	P	
STORM DRAIN UNDERGROUND UTILITY	SD	12" — SD — HDPE 1
CABLE UNDERGROUND UTILITY	T	
GAS UNDERGROUND UTILITY	G	
WATER UNDERGROUND UTILITY	W	
CONCRETE SURFACE		
BUILDING		
GRAVEL PATH/MAINTENANCE ACCESS		
BOARDWALK		
SIDEWALK		
CUT DAYLIGHT LINE		C
FILL DAYLIGHT LINE		F
PARCEL LINE		
PROJECT BOUNDARY LINE		
TEST PIT		
PIEZOMETER		
MONITORING WELL		
ABANDON SD		
EASEMENT		
CEDAR SPLIT 3-RAIL FENCE		

ABBREVIATIONS

AC	ASPHALT CONCRETE
AD	ALGEBRAIC DIFFERENCE
ALUM	ALUMINUM
AP	ANGLE POINT
APPROX	APPROXIMATE
ASPH	ASPHALT
@	AT
AVE	AVENUE
B/W	BACK OF WALK
BLDG	BUILDING
BM	BENCH MARK
BOW	BOTTOM OF WALL
BT	BURIED TELEPHONE
BVC	BEGIN VERTICAL CURVE
CB	CATCH BASIN
CCP	CONCRETE CYLINDER PIPE
CG	CLEARING AND GRUBBING
CI	CAST IRON
CIP	CAST IN PLACE
CL	CLASS
℄, CL	CENTERLINE
CLR	CLEAR
CMP	CORRUGATED OR CULVERT METAL PIPE
CO	CLEANOUT
CONC	CONCRETE
CP	CONCRETE PIPE, CULVERT PIPE
CPEP	CORRUGATED POLYETHYLENE PIPE
CPSSP	CORRUGATED POLYETHYLENE STORMWATER SEWER PIPE
CSBC	CRUSHED SURFACING BASE COURSE
CSTC	CRUSHED SURFACING TOP COURSE
CULV	CULVERT
DI	DUCTILE IRON
DIA	DIAMETER
DWG	DRAWING
E	EAST, EASTING
EA	EACH
EASE	EASEMENT
ECB	EROSION CONTROL BLANKET
EG	EXISTING GROUND
EL,ELEV	ELEVATION
EOP	EDGE OF PAVEMENT
EQ	EQUAL
EVCE	END VERTICAL CURVE ELEVATION
EVCS	END VERTICAL CURVE STATION
EX,EXIST	EXISTING
FG	FINISHED GRADE
FH	FIRE HYDRANT
FL	FLOW LINE, FLANGE
FM	FORCE MAIN
FO	FIBER OPTIC
FOC	FACE OF CURB
FT	FOOT, FEET
FTG	FOOTING
G	GAS
GA	GAUGE
GALV	GALVANIZED
GV	GATE VALVE
H, HORIZ	HORIZONTAL
HDPE	HIGH DENSITY POLYETHYLENE
HMA	HOT MIX ASPHALT
ID	INSIDE DIAMETER
IE	INVERT ELEVATION
IN	INCH
IPS	IRON PIPE SIZE
JT	JOINT
KC	KITSAP COUNTY
L	LENGTH
LPS	LOW PRESSURE SEWER
LT	LEFT
LF	LINEAR FOOT
MAX	MAXIMUM
MB	MAILBOX
MEF	MAXIMUM EXTENT FEASIBLE
MFR	MANUFACTURER
MH	MANHOLE
MIDPT	MIDPOINT
MIN	MINIMUM
MISC	MISCELLANEOUS
MJ	MECHANICAL JOINT
MON	MONUMENT
N	NORTH, NORTHING
NE	NORTHEAST
NO	NUMBER
NTS	NOT TO SCALE
NW	NORTHWEST
OC	ON CENTER
OD	OUTSIDE DIAMETER
OHWM	ORDINARY HIGH WATER MARK
OP	OVERHEAD POWER
P	POWER
PAVE	PAVEMENT
PC	POINT OF CURVATURE
PCC	PRE CAST CONCRETE
PE	POLYETHYLENE
PI	POINT OF INTERSECTION
PK	SURVEY NAIL
PP	POWER POLE
PSI	POUNDS PER SQUARE INCH
PT	POINT OF TANGENCY, POINT
PVC	POLYVINYL CHLORIDE PIPE
PVI	POINT OF VERTICAL INTERSECTION
PVT	POINT OF VERTICAL TANGENCY
R	RADIUS
REQ	REQUIRED
ROW, R/W	RIGHT OF WAY
RP	RADIUS POINT
RT	RIGHT
S	SOUTH
SCH	SCHEDULE
SD	STORM DRAIN
SDCB	STORM DRAIN CATCH BASIN
SDMH	STORM DRAIN MANHOLE
SE	SOUTHEAST
SECT	SECTION
SF	SQUARE FOOT, FEET
SHLDR	SHOULDER
SHT	SHEET
SIM	SIMILAR
SL	SLOPE
SPEC	SPECIFICATIONS
SQ	SQUARE
SS	SANITARY SEWER
SSFM	SANITARY SEWER FORCE MAIN
SSMH	SANITARY SEWER MANHOLE
ST	STREET
STA	STATION
STD	STANDARD
SW	SOUTHWEST
S/W	SIDEWALK
T, TEL	TELEPHONE
TBC	TOP BACK OF CURB
TCE	TEMPORARY CONSTRUCTION EASEMENT
TESC	TEMPORARY EROSION & SEDIMENT CONTROL
TOW	TOP OF WALL
TYP	TYPICAL
U/G	UNDERGROUND
UNO	UNLESS NOTED OTHERWISE
V, VERT	VERTICAL
W	WATER
W/	WITH
W/O	WITHOUT
WSDOT	WASHINGTON STATE DEPARTMENT OF TRANSPORTATION

GENERAL NOTES:

1. THE CONTRACTOR SHALL CALL THE UTILITY LOCATION REQUEST CENTER PRIOR TO ANY EXCAVATION WORK. NO EXCAVATION SHALL BEGIN UNTIL ALL UNDERGROUND UTILITIES HAVE BEEN LOCATED.
2. ALL MATERIAL AND WORKMANSHIP SHALL BE IN ACCORDANCE WITH THE REQUIREMENTS OF THE WASHINGTON STATE DEPARTMENT OF TRANSPORTATION/APWA STANDARD SPECIFICATIONS FOR ROAD, BRIDGE, AND MUNICIPAL CONSTRUCTION, LATEST EDITION.
3. THE CONTRACTOR SHALL MEET THE CONDITIONS OF ALL PROJECT PERMITS AND LOCAL, STATE, AND FEDERAL LAWS AND REGULATIONS.
4. THE CONTRACTOR SHALL LIMIT THE AREA OF CLEARING TO ONLY THAT WHICH IS NECESSARY TO COMPLETE THE REQUIRED WORK. ALL DISTURBED AREAS SHALL BE GRADED TO MATCH THE EXISTING GROUND AND PROMPTLY HYDROSEEDED.
5. ALL EROSION AND SEDIMENTATION CONTROL MEASURES SHALL BE IN ACCORDANCE WITH BEST MANAGEMENT PRACTICES CONTAINED WITHIN KITSAP COUNTY STORMWATER MANAGEMENT MANUAL.
6. ALL CATCH BASINS AND MANHOLES SHALL HAVE KITSAP COUNTY STANDARD LOCKING STANDARD FRAME AND GRATES UNLESS OTHERWISE SPECIFIED, SEE SPECIAL PROVISIONS AND ATTACHMENTS FOR DETAILS.
7. PROTECTION OF THE ENVIRONMENT. NO CONSTRUCTION RELATED ACTIVITY SHALL CONTRIBUTE TO THE DEGRADATION OF THE ENVIRONMENT, ALLOW MATERIAL TO ENTER SURFACE OR GROUND WATERS OR ALLOW PARTICULATE EMISSIONS TO THE ATMOSPHERE, WHICH EXCEED STATE OR FEDERAL STANDARDS. ANY ACTIONS THAT POTENTIALLY ALLOW A DISCHARGE TO STATE WATERS MUST HAVE PRIOR APPROVAL OF THE WASHINGTON STATE DEPARTMENT OF ECOLOGY.

SECTION AND DETAIL DESIGNATIONS

DETAIL CALLOUT:

1 / C2 — INDICATES DETAIL NUMBER; INDICATES DRAWING WHERE DETAIL IS SHOWN

A / C2 — INDICATES SECTION LETTER; INDICATES DRAWING WHERE SECTION IS SHOWN

A / – — DETAIL OR SECTION APPEARS ON THE SAME SHEET

SECTION AND DETAIL DESIGNATION:

INDICATES DETAIL NUMBER

DETAIL 1 C1
NO SCALE

INDICATES DRAWING WHERE DETAIL IS REFERENCED TO

INDICATES SECTION LETTER

SECTION A C1
NO SCALE

INDICATES DRAWING WHERE SECTION IS REFERENCED TO

PROFILE ELEVATIONS

182.34 / 182.39

APPROXIMATE EXISTING GRADE ELEVATION — FINISH GRADE ELEVATION

PLAN ELEVATIONS

181.56 (or) X — FINISH GRADE ELEVATION AT FLOW LINE OR EDGE OF PAVEMENT

BID SET
FEBRUARY 29, 2016

Parametrix
4660 KITSAP WAY, SUITE A
BREMERTON, WASHINGTON 98312
T. 360.377.0014 F. 360.479.5961
www.parametrix.com

811 Know what's below. Call before you dig.

CONTROL POINTS

REVISIONS

No.	BY	DATE	DESCRIPTION

SURVEYED: PMX
DESIGNED: JN
DRAWN: JC
CHECKED: DD
CRP No.
DATE: 02/29/16

JESSE L. NEILSON — STATE OF WASHINGTON — 50736 — REGISTERED PROFESSIONAL ENGINEER — 3/29/16

KITSAP COUNTY DEPT. OF PUBLIC WORKS
614 DIVISION STREET MS-26
PORT ORCHARD, WA 98366
TEL:(360) 337-5777 FAX:(360) 337-4867

DUWE'IQ STORMWATER TREATMENT WETLAND

NOTES, LEGEND, AND ABBREVIATIONS

KITSAP COUNTY, WASHINGTON
SECTION 16, TOWNSHIP 25 NORTH, RANGE 1 EAST, W.M.

U:\PSO\PROJECTS\C-EKTS\0178-KitsapCo\233-5718-35 DuweiqSW Trtmnt\WETLAND\99SVCS\CADD\DWG\PSO178135-C02-G.DWG JASON GRAUER 12:55 PM 2/29/2016

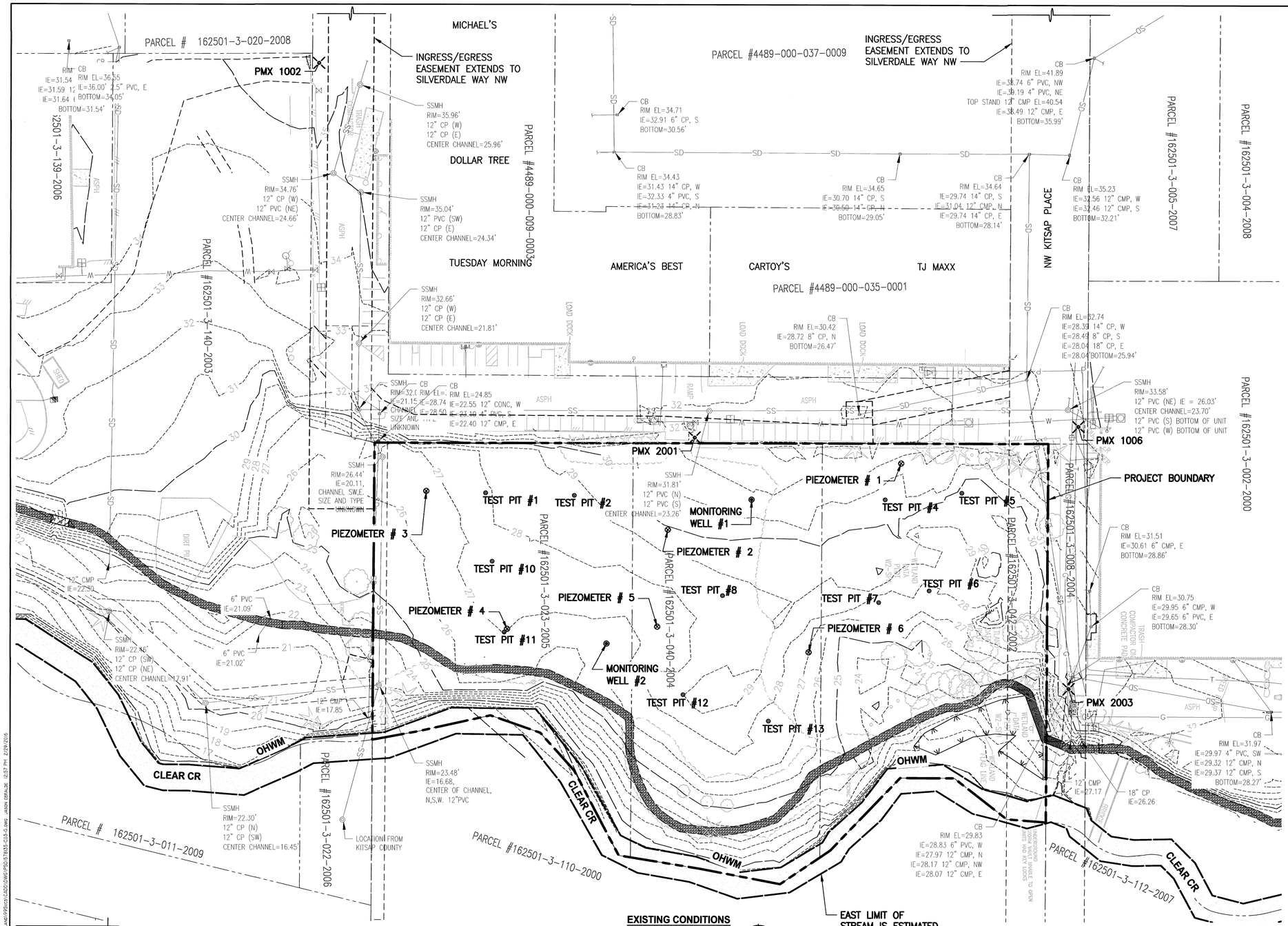

PROJECT CONTROL				
#	NORTHING	EASTING	ELEV	DESC
501	245802.79	1184645.59	28.54	PK NAIL
504	245467.00	1184467.02	32.95	PK NAIL
1002	244418.41	1183637.12	35.24	PK NAIL
1006	244994.79	1183926.93	33.79	PK NAIL
1010	245415.50	1184143.90	34.85	PK NAIL
1012	245762.48	1184434.46	30.41	PK NAIL
1013	246043.17	1184623.71	33.15	PK NAIL
2001	244700.71	1183929.81	31.88	PK NAIL
2003	244983.50	1184127.98	30.17	PK NAIL

DATUM INFORMATION:

HORIZONTAL DATUM
BASIS OF MERIDIAN IS NAD 83/91, WASHINGTON STATE PLANE, NORTH ZONE, WITH VERIFICATION TIE TO WSDOT MONUMENT DESIGNATION "GPSPC7" (COORDINATES LISTED BELOW).

VERTICAL DATUM
BASIS OF ELEVATION IS NAVD-88, WITH VERIFICATION TIE TO WSDOT MONUMENT DESIGNATION "GPSPC7" (ELEVATION LISTED BELOW).

WSDOT MONUMENT DESIGNATION "GPSPC7" (NOT SHOWN HEREON).
N=244111.04
E=1183548.45
ELEV.=35.99

NOTES:

1. CONTRACTOR TO DECOMMISSION MONITORING WELLS AND PIEZOMETERS PER CHAPTER 173-160-420 OF THE WASHINGTON ADMINISTRATIVE CODE (WAC).

BID SET
FEBRUARY 29, 2016

EXISTING CONDITIONS
PLAN
SCALE IN FEET
0 40 80

Parametrix
4660 KITSAP WAY, SUITE A
BREMERTON, WASHINGTON 98312
T. 360.377.0014 F. 360.479.5961
www.parametrix.com

811 Know what's below. Call before you dig.

CONTROL POINTS

REVISIONS

No.	BY	DATE	DESCRIPTION

SURVEYED: PMX
DESIGNED: JN
DRAWN: JC
CHECKED: DD
CRP No.
DATE: 02/29/16

JESSE L. NEILSON, STATE OF WASHINGTON, 50736, REGISTERED PROFESSIONAL ENGINEER, 3/29/16

KITSAP COUNTY
DEPT. OF PUBLIC WORKS
614 DIVISION STREET MS-26
PORT ORCHARD, WA 98366
TEL:(360) 337-5777 FAX:(360) 337-4867

DUWE'IQ STORMWATER TREATMENT WETLAND

EXISTING CONDITIONS AND SURVEY CONTROL

KITSAP COUNTY, WASHINGTON
SECTION 16, TOWNSHIP 25 NORTH, RANGE 1 EAST, W.M.

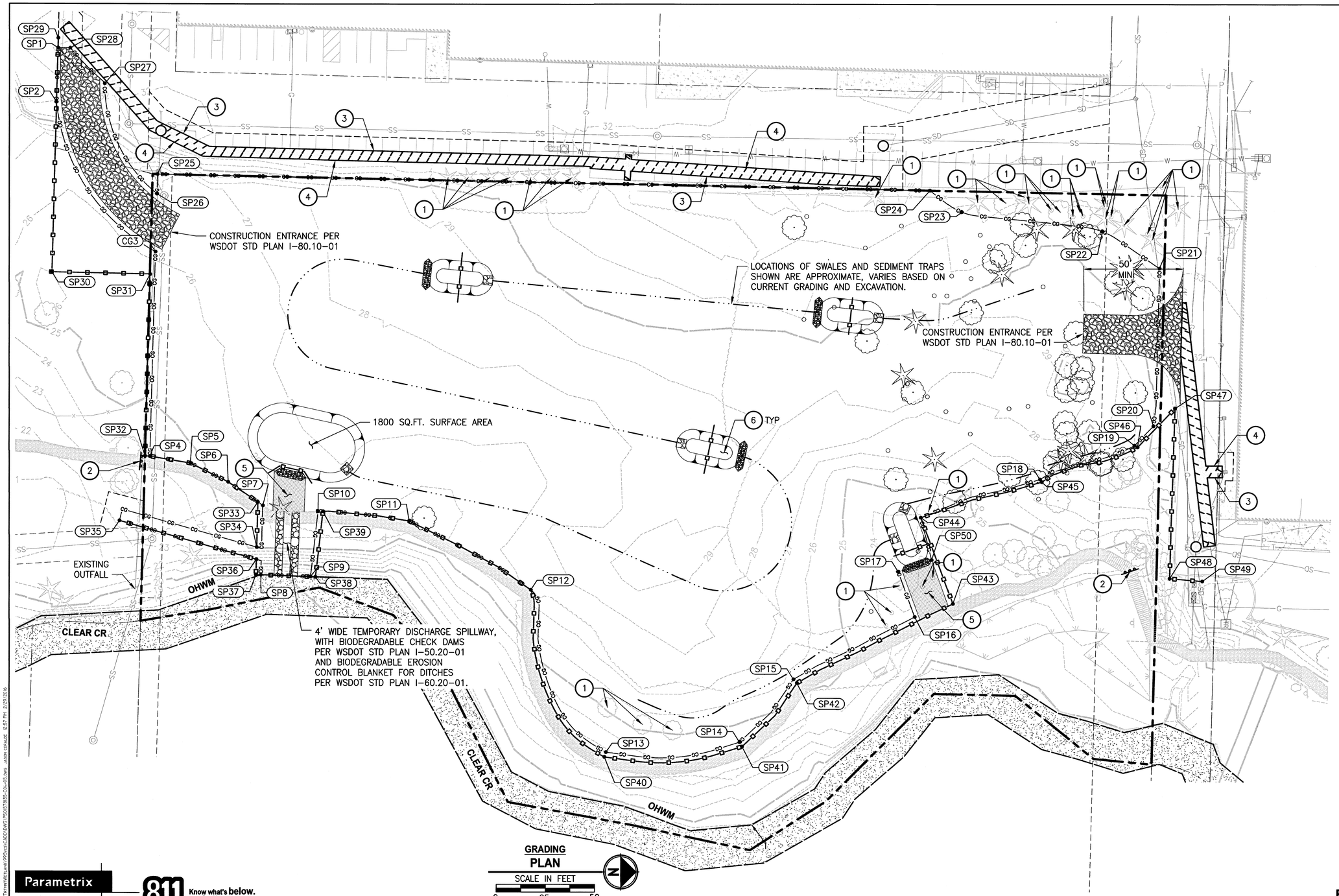

GRADING PLAN

SCALE IN FEET 0 25 50

LEGEND:

- STORM DRAIN INLET PROTECTION (OPEN GRATES ONLY) PER WSDOT STD PLAN I-40.20-00
- 12" THICK PAD, 4" TO 8" QUARRY SPALLS
- GRAVEL BERM PER WSDOT STD PLAN I-80.10-01
- SEDIMENT TRAP PER WASHINGTON DEPARTMENT OF ECY BMP C240
- CLEARING AND GRUBBING LIMITS
- SILT FENCE PER WSDOT STD PLAN I-30.15-02
- INTERCEPTOR SWALE WITH ROCK CHECK DAMS PER WSDOT STD PLAN I-50.20-01, AND SEE DETAIL 1/–
- SAWCUT
- REMOVE ASPHALT CONCRETE PAVEMENT
- (SPXX) SITE PREP CONTROL POINTS, SEE SHEET 7.

KEY NOTES:

1. PROTECT EXISTING TREE/ ROOT STRUCTURE. NATIVE TREES AND SHRUB AREAS SHALL BE PRESERVED AND PROTECTED WITHIN CLEARING AND GRUBBING AREAS. NOTIFY PROJECT REPRESENTATIVE 5 DAYS PRIOR TO START OF CLEARING ACTIVITY FOR ASSISTANCE FLAGGING PLANTS AND AREAS TO PROTECT AND FOR APPROVAL OF CLEARING LIMITS. USE ONLY HAND TOOLS AND METHODS WHEN WORKING INSIDE THE DRIPLINE AREA OF EXISTING TREES AND SHRUBS.
2. HIGH VISIBILITY CONSTRUCTION FENCE, PEDESTRIAN BARRICADE, AND SIGN "TRAIL CLOSED". MAINTAIN SIGNS DURING CONSTRUCTION PERIOD.
3. SAWCUT ASPHALT TO ENSURE CLEAN EDGE.
4. PIPE TRENCHING AND PAVEMENT REPAIR LIMITS, SEE DETAIL 2/15
5. VEGETATED STRIP PER WASHINGTON DEPARTMENT OF ECY BMP C234. **DO NOT CLEAR & GRUB VEGETATED STRIP.**
6. MIN SEDIMENT TRAP SURFACE AREA IS 500 SQ.FT. MEASURED AT WEIR INVERT. TYPICAL ALL SEDIMENT TRAPS. UNLESS SPECIFIED OTHERWISE. SEE DETAIL 1/15

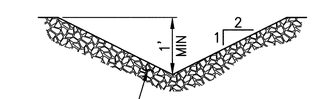

INTERCEPTOR SWALE DETAIL 1

NO SCALE

BID SET
FEBRUARY 29, 2016

Parametrix
4660 KITSAP WAY, SUITE A
BREMERTON, WASHINGTON 98312
T. 360.377.0014 F. 360.479.5961
www.parametrix.com

811 Know what's below. Call before you dig.

CONTROL POINTS

REVISIONS

No.	BY	DATE	DESCRIPTION

SURVEYED:	PMX
DESIGNED:	JN
DRAWN:	JC
CHECKED:	DD
CRP No.	
DATE:	02/29/16

JESSE L. NEILSON, STATE OF WASHINGTON, 50736, REGISTERED PROFESSIONAL ENGINEER, 2/29/16

KITSAP COUNTY
DEPT. OF PUBLIC WORKS
614 DIVISION STREET MS-26
PORT ORCHARD, WA 98366
TEL:(360) 337-5777 FAX:(360) 337-4867

DUWE'IQ STORMWATER TREATMENT WETLAND

TREATMENT WETLAND SITE PREP & TESC PLAN

KITSAP COUNTY, WASHINGTON
SECTION 16, TOWNSHIP 25 NORTH, RANGE 1 EAST, W.M.

U:\PSD\Projects\Clients\1578-Kitsap Co\1233-1578-135 Duwe Cs SW Trtmnt Wtl Land 99Pct\CADD\DWG\PSD\578135-C04-C05.dwg JASON CASALE 12:57 PM 2/29/2016

CONSTRUCTION SEQUENCE:

1. CONSTRUCT STABILIZED CONSTRUCTION ENTRANCE(S). INSTALL INLET PROTECTION.
2. CONSTRUCT SILT FENCE BARRIERS.
3. CONSTRUCT DISCHARGE SPILLWAY AND SEDIMENT TRAPS.
4. CONSTRUCT RUNOFF INTERCEPTION AND DIVERSION DITCHES, OR PIPING
5. CLEAR AND GRADE THE MINIMUM SITE AREA REQUIRED FOR CONSTRUCTION OF THE VARIOUS PHASES OF WORK.
6. MAINTAIN ALL EROSION AND SEDIMENTATION CONTROL FACILITIES TO PROVIDE THE REQUIRED PROTECTION OF DOWNSTREAM WATER QUALITY.
7. MODIFY INTERCEPTOR DITCHES AND SEDIMENT TRAPS AS NEEDED DURING EXCAVATION ACTIVITIES.
8. PROVIDE PERMANENT SITE STABILIZATION.
9. EROSION AND SEDIMENTATION CONTROL FACILITIES SHALL NOT BE REMOVED UNTIL CONSTRUCTION IS COMPLETE AND ACCEPTED BY KITSAP COUNTY.

TEMPORARY EROSION AND SEDIMENTATION CONTROL MAINTENANCE REQUIREMENTS:

1. EROSION AND SEDIMENTATION CONTROL FACILITIES SHALL BE INSPECTED AFTER EACH STORM EVENT AND DAILY DURING PROLONGED RAINFALL.
2. NECESSARY REPAIRS OR REPLACEMENT OF FACILITIES SHALL BE ACCOMPLISHED PROMPTLY.
3. SEDIMENT DEPOSITS SHALL BE REMOVED AFTER EACH STORM EVENT OR WHEN THE LEVEL OF DEPOSITION REACHES APPROXIMATELY ONE–HALF THE MAXIMUM POTENTIAL DEPTH.
4. SEDIMENT DEPOSITS REMAINING IN PLACE AFTER THE ESC FACILITIES ARE NO LONGER REQUIRED SHALL BE DRESSED TO CONFORM TO THE EXISTING GRADE, PREPARED AND SEEDED.
5. TEMPORARY EROSION AND SEDIMENTATION CONTROL FACILITIES SHALL BE MAINTAINED BY CONTRACTOR.

GENERAL EROSION AND SEDIMENTATION CONTROL NOTES:

1. THE FOLLOWING EROSION AND SEDIMENTATION CONTROL NOTES APPLY TO ALL CONSTRUCTION SITE ACTIVITIES AT ALL TIMES, UNLESS OTHERWISE SPECIFIED ON THESE PLANS:
2. APPROVAL OF THIS EROSION AND SEDIMENTATION CONTROL PLAN DOES NOT CONSTITUTE AN ACCEPTANCE OF THE DRAINAGE DESIGN.
3. THE CONTRACTOR AND HIS/HER RESPRESENTATIVES SHALL BE RESPONSIBLE AT ALL TIMES FOR PREVENTING SILT–LADEN RUNOFF FROM DISCHARGING FROM THE PROJECT SITE. FAILURE BY THE OWNER AND/OR CONTRACTOR CAN RESULT IN A FINE.
4. THE DESIGNATED CONTRACTOR TEMPORARY CONTACT PERSON MUST BE AVAILABLE FOR CONTACT BY TELEPHONE ON A 24 HOUR BASIS THROUGHOUT CONSTRUCTION AND UNTIL THE PROJECT HAS BEEN COMPLETED AND ACCEPTED BY THE COUNTY.
5. THE IMPLEMENTATION OF THESE ESC PLANS AND THE CONSTRUCTION, MAINTENANCE, REPLACEMENT AND UPGRADING OF THESE FACILITIES IS THE RESPONSIBILITY OF THE CONTRACTOR FROM THE BEGINNING OF CONSTRUCTION UNTIL ALL CONSTRUCTION IS COMPLETED AND ACCEPTED BY THE COUNTY AND THE SITE IS STABILIZED.
6. PRIOR TO BEGINNING ANY WORK ON THE PROJECT SITE, A PRECONSTRUCTION CONFERENCE MUST BE HELD, AND SHALL BE ATTENDED BY THE GENERAL CONTRACTOR, THE PROJECT ENGINEER, REPRESENTATIVES FROM AFFECTED UTILITIES, AND A REPRESENTATIVE OF KITSAP COUNTY.
7. THE EROSION AND SEDIMENTATION CONTROL FACILITIES SHOWN ON THIS PLAN ARE TO BE CONSIDERED ADEQUATE BASIC REQUIREMENTS FOR THE ANTICIPATED SITE CONDITIONS. DURING CONSTRUCTION, DEVIATIONS FROM THIS PLAN MAY BE NECESSARY IN ORDER TO MAINTAIN WATER QUALITY. MINOR DEPARTURES FROM THIS PLAN ARE PERMITTED SUBJECT TO THE APPROVAL OF THE COUNTY INSPECTOR. HOWEVER, EXCEPT FOR EMERGENCY SITUATIONS, ALL OTHER DEVIATIONS FROM THIS PLAN MUST BE DESIGNED BY THE PROJECT ENGINEER AND APPROVED BY KITSAP COUNTY PRIOR TO INSTALLATION.

GENERAL EROSION & SEDIMENTATION CONTROL NOTES CONT:

8. ALL EROSION AND SEDIMENTATION CONTROL MEASURES SHALL BE INSPECTED BY THE CONTRACTOR ON A FREQUENT BASIS AND IMMEDIATELY AFTER EACH RAINFALL, AND MAINTAINED AS NECESSARY TO INSURE THEIR CONTINUED FUNCTIONING. ALL SEDIMENT MUST BE REMOVED FROM SILT FENCES, STRAW BALES, SEDIMENT PONDS, ETC. PRIOR TO THE SEDIMENT REACHING 1/3 ITS MAXIMUM POTENTIAL DEPTH.
9. AT NO TIME SHALL CONCRETE, CONCRETE BY–PRODUCTS, VEHICLE FLUIDS, PAINT, CHEMICALS, OR OTHER POLLUTING MATTER BE PERMITTED TO DISCHARGE TO THE TEMPORARY OR PERMANENT DRAINAGE SYSTEM, OR TO DISCHARGE FROM THE PROJECT SITE.
10. PERMANENT DETENTION/RETENTION PONDS, PIPES, TANKS OR VAULTS MAY ONLY BE USED FOR SEDIMENT CONTAINMENT WHEN SPECIFICALLY INDICATED ON THESE PLANS.
11. PROTECTION OF THE ENVIRONMENT: NO CONSTRUCTION RELATED ACTIVITY SHALL CONTRIBUTE TO THE DEGRADATION OF THE ENVIRONMENT, ALLOW MATERIAL TO ENTER SURFACE OR GROUND WATERS, OR ALLOW PARTICULATE EMISSIONS TO THE ATMOSPHERE, WHICH EXCEED STATE OR FEDERAL STANDARDS. ANY ACTIONS THAT POTENTIALLY ALLOW A DISCHARGE TO STATE WATERS MUST HAVE PRIOR APPROVAL OF THE WASHINGTON STATE DEPARTMENT OF ECOLOGY.

MINIMUM EROSION & SEDIMENTATION CONTROL REQUIREMENTS:

1. STABILIZATION AND SEDIMENT TRAPPING. ALL EXPOSED AND UNWORKED SOILS, INCLUDING SOIL STOCKPILES, SHALL BE STABILIZED BY SUITABLE APPLICATION OF BMPS THAT PROTECT SOIL FROM THE EROSIVE FORCES OF RAINDROP IMPACT AND FLOWING WATER. APPLICABLE PRACTICES INCLUDE, BUT ARE NOT LIMITED TO VEGETATIVE ESTABLISHMENT, MULCHING, PLASTIC COVERING, AND THE EARLY APPLICATION OF GRAVEL BASE ON AREAS TO BE PAVED. FROM OCTOBER 1 TO APRIL 30, NO SOILS SHALL REMAIN UNSTABILIZED FOR MORE THAN 2 DAYS. FROM MAY 1 TO SEPTEMBER 30, NO SOILS SHALL REMAIN UNSTABILIZED FOR MORE THAN 7 DAYS.
2. AT ALL TIMES OF THE YEAR, THE CONTRACTOR SHALL HAVE SUFFICIENT MATERIALS, EQUIPMENT AND LABOR ON–SITE TO STABILIZE AND PREVENT EROSION FROM ALL DENUDED AREAS WITHIN 12–HOURS AS SITE AND WEATHER CONDITIONS DICTATE.
3. FROM OCTOBER 1ST TO APRIL 30TH, THE PROJECT ENGINEER SHALL VISIT THE DEVELOPMENT SITE A MINIMUM OF ONCE PER WEEK FOR THE PURPOSE OF INSPECTING THE EROSION AND SEDIMENTATION CONTROL FACILITIES, REVIEWING THE PROGRESS OF CONSTRUCTION, AND VERIFYING THE EFFECTIVENESS OF THE EROSION CONTROL MEASURES BEING UNDERTAKEN. THE PROJECT ENGINEER SHALL IMMEDIATELY INFORM THE COUNTY OF ANY PROBLEMS OR POTENTIAL PROBLEMS OBSERVED DURING SAID SITE VISITS, AS WELL AS OF ANY RECOMMENDED CHANGES IN THE EROSION CONTROL MEASURES TO BE UNDERTAKEN. WHEN REQUESTED BY THE COUNTY, THE PROJECT ENGINEER SHALL PROVIDE THE COUNTY WITH WRITTEN RECORDS OF SAID WEEKLY SITE VISITS, INCLUDING DATES OF VISITS AND NOTED SITE OBSERVATIONS.
4. IN THE EVENT THAT GROUND ON A PROJECT SITE IS LEFT BARE AFTER SEPTEMBER 30TH, THE COUNTY MAY ISSUE A STOP WORK ORDER FOR THE ENTIRE PROJECT UNTIL SATISFACTORY CONTROLS ARE PROVIDED. IN ADDITION, THE OWNER WILL BE SUBJECT TO THE PENALTIES PROVIDED IN SECTION 12.32 OF THE KITSAP COUNTY CODE.
5. IN THE EVENT THAT GROUND ON A PROJECT SITE IS LEFT BARE AFTER SEPTEMBER 30TH, AND THE COUNTY IS UNSUCCESSFUL IN CONTACTING THE DESIGNATED EMERGENCY CONTACT PERSON, THE COUNTY MAY ENTER THE PROJECT SITE AND INSTALL TEMPORARY GROUND COVER MEASURES AND BILL THE CONTRACTOR FOR ALL EXPENSES INCURRED BY THE COUNTY. THESE COSTS WILL BE IN ADDITION TO ANY MONETARY PENALTIES LEVIED AGAINST THE CONTRACTOR.
6. DELINEATION OF CLEARING AND EASEMENT LIMITS. CLEARING LIMITS, SETBACKS, BUFFERS, AND SENSITIVE OR CRITICAL AREAS SUCH AS STEEP SLOPES, WETLANDS AND RIPARIAN CORRIDORS SHALL BE CLEARLY MARKED IN THE FIELD AND INSPECTED BY KITSAP COUNTY DEPARTMENT OF COMMUNITY DEVELOPMENT PRIOR TO COMMENCEMENT OF LAND CLEARING ACTIVITIES. DURING THE CONSTRUCTION PERIOD, NO DISTURBANCE BEYOND THE FLAGGED CLEARING LIMITS SHALL BE PERMITTED. THE FLAGGING SHALL BE MAINTAINED BY THE CONTRACTOR FOR THE DURATION OF CONSTRUCTION.
7. PROTECTION OF ADJACENT PROPERTIES. ADJACENT PROPERTIES SHALL BE PROTECTED FROM SEDIMENT DEPOSITION BY APPROPRIATE USE OF VEGETATIVE BUFFER STRIPS, SEDIMENT BARRIERS OR FILTERS, DIKES OR MULCHING, OR BY A COMBINATION OF THESE MEASURES AND OTHER APPROPRIATE BMPS.

MINIMUM EROSION AND SEDIMENTATION CONTROL REQUIREMENTS CONT:

8. TIMING AND STABILIZATION OF SEDIMENT TRAPPING MEASURES. SEDIMENT PONDS AND TRAPS, PERIMETER DIKES, SEDIMENT BARRIERS AND OTHER BMPS INTENDED TO TRAP SEDIMENT ON–SITE SHALL BE CONSTRUCTED AS A FIRST STEP IN GRADING. THESE BMPS SHALL BE FUNCTIONAL BEFORE LAND DISTURBING ACTIVITIES TAKE PLACE. EARTHEN STRUCTURES SUCH AS DAMS, DIKES, AND DIVERSIONS SHALL BE STABILIZED ACCORDING TO THE TIMING INDICATED IN ITEM (1) ABOVE.
9. SLOPE STABILIZATION. CUT AND FILL SLOPES SHALL BE CONSTRUCTED IN A MANNER THAT WILL MINIMIZE EROSION. ROUGHENED SOIL SURFACES ARE PREFERRED TO SMOOTH SURFACES. INTERCEPTORS SHOULD BE CONSTRUCTED AT THE TOP OF LONG, STEEP SLOPES WHICH HAVE SIGNIFICANT AREAS ABOVE THAT CONTRIBUTE RUNOFF. CONCENTRATED RUNOFF SHOULD NOT BE ALLOWED TO FLOW DOWN THE FACE OF A CUT OR FILL SLOPE UNLESS CONTAINED WITHIN AN ADEQUATE CHANNEL OR PIPE SLOPE DRAIN. WHEREVER A SLOPE FACE CROSSES A WATER SEEPAGE PLANE, ADEQUATE DRAINAGE OR OTHER PROTECTION SHOULD BE PROVIDED. IN ADDITION, SLOPES SHOULD BE STABILIZED IN ACCORDANCE WITH ITEM (1) ABOVE.
10. CONTROLLING OFF–SITE EROSION. PROPERTIES AND WATERWAYS DOWNSTREAM FROM DEVELOPMENT SITES SHALL BE PROTECTED FROM EROSION DUE TO INCREASES IN THE VOLUME, VELOCITY, AND PEAK FLOW RATE OF STORMWATER RUNOFF FROM THE DEVELOPMENT SITE BY THE IMPLEMENTATION OF APPROPRIATE BMPS TO MINIMIZE ADVERSE DOWNSTREAM IMPACTS.
11. STABILIZATION OF TEMPORARY CONVEYANCE CHANNELS AND OUTLETS. ALL TEMPORARY ON–SITE CONVEYANCE CHANNELS SHALL BE DESIGNED, CONSTRUCTED AND STABILIZED TO PREVENT EROSION FROM THE EXPECTED FLOW VELOCITY FROM A 2–YEAR FREQUENCY, 24–HOUR DURATION STORM FOR THE POST–DEVELOPMENT CONDITION. STABILIZATION ADEQUATE TO PREVENT EROSION OF OUTLETS, ADJACENT STREAMBANKS, SLOPES AND DOWNSTREAM REACHES SHALL BE PROVIDED AT THE OUTLETS OF ALL CONVEYANCE SYSTEMS.
12. STORM DRAIN INLET PROTECTION. ALL STORM DRAIN INLETS MADE OPERABLE DURING CONSTRUCTION SHALL BE PROTECTED SO THAT STORMWATER RUNOFF SHALL NOT ENTER THE CONVEYANCE SYSTEM WITHOUT FIRST BEING FILTERED OR OTHERWISE TREATED TO REMOVE SEDIMENT. AFTER PROPER WRITTEN APPLICATION, THE REQUIREMENT FOR INLET PROTECTION MAY BE WAIVED BY THE COUNTY ON A SITE–SPECIFIC BASIS WHEN THE CONVEYANCE SYSTEM DOWNSTREAM OF THE INLET DISCHARGES TO AN APPROPRIATE SEDIMENT CONTAINMENT BMP AND THE CONVEYANCE SYSTEM CAN BE ADEQUATELY CLEANED FOLLOWING SITE STABILIZATION.

MINIMUM EROSION AND SEDIMENTATION CONTROL REQUIREMENTS CONT:

13. UNDERGROUND UTILITY CONSTRUCTION. THE CONSTRUCTION OF UNDERGROUND UTILITY LINES SHALL BE LIMITED, WHERE FEASIBLE, TO NO MORE THAN 500 FEET OF OPEN TRENCH AT ANY ONE TIME. WHERE CONSISTENT WITH SAFETY AND SPACE CONSIDERATIONS, EXCAVATED MATERIAL SHALL BE PLACED ON THE UPHILL SIDE OF THE TRENCH. DEWATERING DEVICES SHALL DISCHARGE TO AN APPROPRIATE SEDIMENT TRAP OR POND, PRECEDED BY ADEQUATE ENERGY DISSIPATION, PRIOR TO RUNOFF LEAVING THE SITE.
14. CONSTRUCTED ACCESS ROUTES. WHEREVER CONSTRUCTION VEHICLE ACCESS ROUTES INTERSECT PAVED ROADS, PROVISIONS MUST BE MADE TO MINIMIZE THE TRANSPORT OF SEDIMENT (MUD) ONTO THE PAVED ROAD BY USE OF APPROPRIATE BMPS SUCH AS A STABILIZED CONSTRUCTION ENTRANCE. IF SEDIMENT IS TRANSPORTED ONTO A ROAD SURFACE, THE ROADS SHALL BE CLEANED THOROUGHLY, AS A MINIMUM, AT THE END OF EACH DAY. SEDIMENT SHALL BE REMOVED FROM ROADS BY SHOVELING OR SWEEPING AND BE TRANSPORTED TO A CONTROLLED SEDIMENT DISPOSAL AREA. STREET WASHING SHALL BE ALLOWED ONLY AFTER SEDIMENT IS REMOVED IN THIS MANNER.
15. REMOVAL OF TEMPORARY BMPS. ALL TEMPORARY EROSION AND SEDIMENT CONTROL BMPS SHALL BE REMOVED WITHIN 30 DAYS AFTER FINAL SITE STABILIZATION IS ACHIEVED OR AFTER THE TEMPORARY BMPS ARE NO LONGER NEEDED. TRAPPED SEDIMENT SHALL BE REMOVED OR STABILIZED ON–SITE. DISTURBED SOIL AREAS RESULTING FROM REMOVAL OF TEMPORARY BMPS SHALL BE PERMANENTLY STABILIZED. THE REMOVAL OF TEMPORARY EROSION AND SEDIMENT CONTROL BMPS MAY NOT BE REQUIRED FOR THOSE PROJECTS, SUCH AS SINGLE FAMILY PLATS, THAT WILL BE FOLLOWED BY ADDITIONAL CONSTRUCTION UNDER A DIFFERENT PERMIT. IN THESE CIRCUMSTANCES, THE NEED FOR REMOVING OR RETAINING THE MEASURES WILL BE EVALUATED ON A SITE–SPECIFIC BASIS.
16. DEWATERING CONSTRUCTION SITES. DEWATERING DEVICES SHALL DISCHARGE INTO AN APPROPRIATE SEDIMENT TRAP OR POND, DESIGNED TO ACCEPT SUCH A DISCHARGE, PRECEDED BY ADEQUATE ENERGY DISSIPATION, PRIOR TO RUNOFF LEAVING THE SITE.
17. CONTROL OF POLLUTANTS OTHER THAN SEDIMENT ON CONSTRUCTION SITES. ALL POLLUTANTS OTHER THAN SEDIMENT THAT OCCUR ON–SITE DURING CONSTRUCTION SHALL BE HANDLED AND LEGALLY DISPOSED OF IN A MANNER THAT DOES NOT CAUSE CONTAMINATION OF STORM OR SURFACE WATERS. POLLUTANTS OF CONCERN INCLUDE, BUT ARE NOT LIMITED TO, FUELS, LUBRICANTS, SOLVENTS, CONCRETE BI–PRODUCTS AND CONSTRUCTION MATERIALS.
18. MAINTENANCE. ALL TEMPORARY AND PERMANENT EROSION AND SEDIMENT CONTROL BMPS SHALL BE MAINTAINED AND REPAIRED AS NEEDED TO ASSURE CONTINUED PERFORMANCE OF THEIR INTENDED FUNCTION. ALL MAINTENANCE AND REPAIR SHALL BE CONDUCTED IN ACCORDANCE WITH THE MANUAL. THE CONTRACTOR SHALL BE RESPONSIBLE FOR ASSURING THAT ANY SUCH FACILITIES DAMAGED DURING FLOODS, STORMS OR OTHER ADVERSE WEATHER CONDITIONS ARE IMMEDIATELY RETURNED TO NORMAL OPERATING CONDITION.

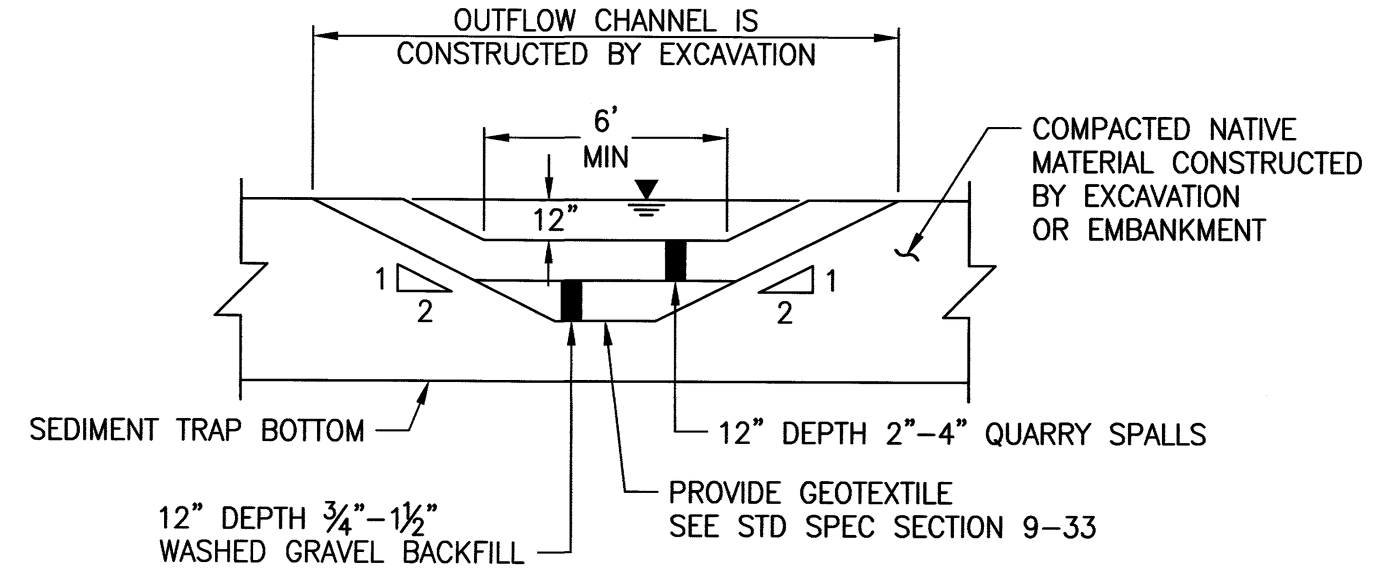

SEDIMENT TRAP SECTION A –

NO SCALE

NOTES:

1. PLACE GEOTEXTILE UNDER THE SPILLWAY AND SIDE SLOPES. PROVIDE A CONTINUOUS LAYER BETWEEN THE GRAVEL/ROCK AND THE NATIVE EARTHEN MATERIAL.
2. SURFACE AREA IS MEASURED AT WEIR INVERT. SEE SURFACE AREA REQUIREMENTS ON SHEET 4.

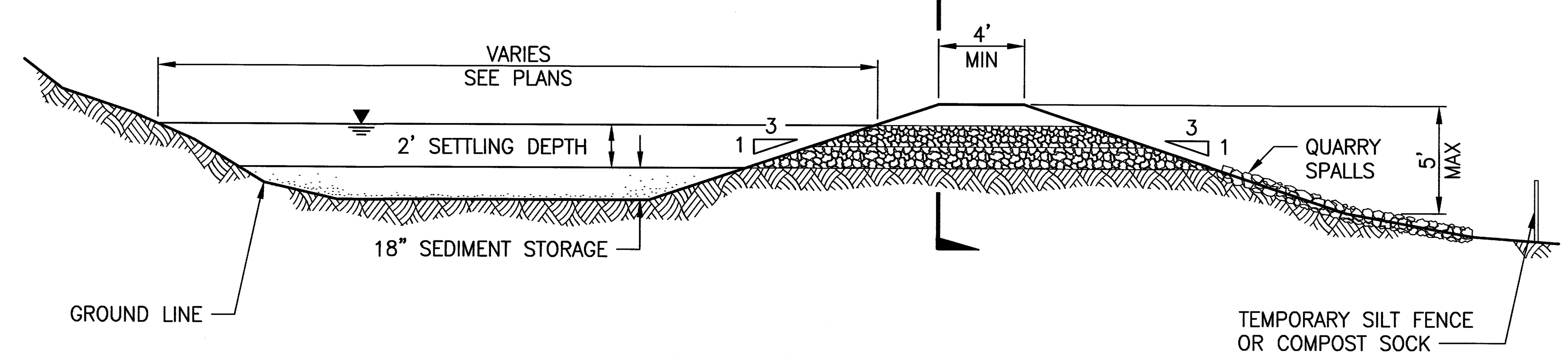

SEDIMENT TRAP DETAIL 1/4

NO SCALE

BID SET

FEBRUARY 29, 2016

Parametrix
4660 KITSAP WAY, SUITE A
BREMERTON, WASHINGTON 98312
T. 360.377.0014 F. 360.479.5961
www.parametrix.com

811 Know what's below. Call before you dig.

CONTROL POINTS	REVISIONS				
	No.	BY	DATE	DESCRIPTION	

SURVEYED: PMX
DESIGNED: JN
DRAWN: JC
CHECKED: DD
CRP No.
DATE: 02/29/16

JESSE L. NEILSON, STATE OF WASHINGTON, 50736, REGISTERED PROFESSIONAL ENGINEER, 2/25/16

KITSAP COUNTY 1857 WASHINGTON

KITSAP COUNTY
DEPT. OF PUBLIC WORKS
614 DIVISION STREET MS–26
PORT ORCHARD, WA 98366
TEL:(360) 337–5777 FAX:(360) 337–4867

DUWE'IQ STORMWATER TREATMENT WETLAND

TESC NOTES AND DETAILS

KITSAP COUNTY, WASHINGTON
SECTION 16, TOWNSHIP 25 NORTH, RANGE 1 EAST, W.M.

SHEET 5 OF 21

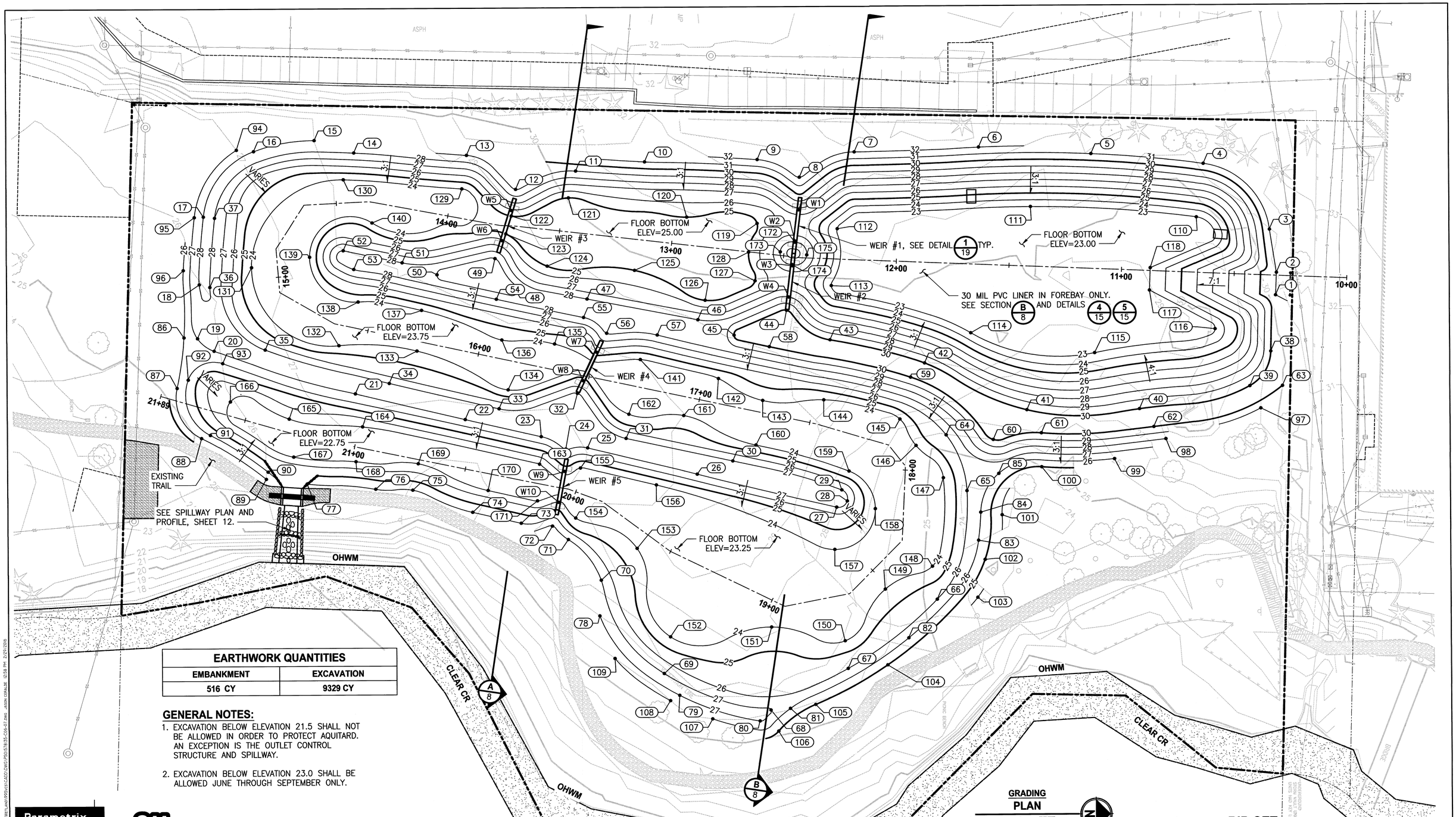

EARTHWORK QUANTITIES	
EMBANKMENT	EXCAVATION
516 CY	9329 CY

GENERAL NOTES:

1. EXCAVATION BELOW ELEVATION 21.5 SHALL NOT BE ALLOWED IN ORDER TO PROTECT AQUITARD. AN EXCEPTION IS THE OUTLET CONTROL STRUCTURE AND SPILLWAY.
2. EXCAVATION BELOW ELEVATION 23.0 SHALL BE ALLOWED JUNE THROUGH SEPTEMBER ONLY.

BID SET
FEBRUARY 29, 2016

Parametrix
4660 KITSAP WAY, SUITE A
BREMERTON, WASHINGTON 98312
T. 360.377.0014 F. 360.479.5961
www.parametrix.com

811 Know what's below. Call before you dig.

CONTROL POINTS

REVISIONS

No.	BY	DATE	DESCRIPTION

SURVEYED:	PMX
DESIGNED:	JN
DRAWN:	JC
CHECKED:	DD
CRP No.	
DATE:	02/29/16

JESSE L. NEILSON — STATE OF WASHINGTON — 50736 — REGISTERED PROFESSIONAL ENGINEER — 3/29/16

KITSAP COUNTY 1857 WASHINGTON
KITSAP COUNTY
DEPT. OF PUBLIC WORKS
614 DIVISION STREET MS-26
PORT ORCHARD, WA 98366
TEL:(360) 337-5777 FAX:(360) 337-4867

DUWE'IQ STORMWATER TREATMENT WETLAND

TREATMENT WETLAND GRADING PLAN

KITSAP COUNTY, WASHINGTON
SECTION 16, TOWNSHIP 25 NORTH, RANGE 1 EAST, W.M.

GRADING POINTS

Point #	Elevation	Northing	Easting	Description
1	31.00	244962.11	1184017.04	AP, TOP
2	31.00	244962.54	1184007.05	AP, TOP
3	31.00	244959.53	1183987.86	PC, TOP
4	31.00	244930.34	1183958.42	PT, TOP
5	31.00	244880.55	1183953.89	FG, TOP
6	32.00	244830.65	1183950.71	FG, TOP
7	32.00	244775.51	1183952.49	PC, TOP
8	32.00	244751.17	1183963.66	MID, TOP
9	32.00	244732.50	1183955.73	PT, TOP
10	31.00	244682.51	1183956.52	FG, TOP
11	29.00	244651.94	1183960.43	PC, TOP
12	29.00	244625.33	1183968.43	MID, TOP
13	29.00	244603.63	1183953.22	PT, TOP
14	28.00	244553.65	1183951.98	FG, TOP
15	28.00	244536.13	1183946.39	PC, TOP
16	28.00	244509.19	1183951.20	FG, TOP
17	28.00	244486.85	1183980.09	PT, TOP
18	28.00	244484.87	1184010.14	FG, TOP
19	27.00	244483.99	1184034.07	MID, TOP
20	27.00	244491.26	1184039.62	PT, TOP
21	27.00	244553.80	1184058.89	FG, TOP
22	27.00	244602.42	1184070.54	FG, TOP
23	27.00	244636.07	1184078.31	PC, TOP
24	27.00	244646.88	1184083.87	MID, TOP
25	27.00	244656.54	1184083.45	PT, TOP
26	27.00	244705.10	1184095.35	FG, TOP
27	27.00	244766.85	1184110.32	PC, TOP
28	27.00	244771.56	1184107.59	MID, TOP
29	27.00	244769.18	1184102.69	PT, TOP
30	27.00	244720.93	1184089.57	FG, TOP

GRADING POINTS

Point #	Elevation	Northing	Easting	Description
31	27.00	244673.62	1184079.33	PC, TOP
32	27.00	244652.17	1184059.20	MID, TOP
33	27.00	244617.47	1184065.83	PC, TOP
34	27.00	244568.82	1184054.31	FG, TOP
35	27.00	244513.93	1184039.26	PC, TOP
36	28.00	244489.53	1184011.34	FG, TOP
37	28.00	244491.82	1183980.64	FG, TOP
38	30.00	244959.85	1184042.03	PC, TOP
39	30.00	244950.47	1184057.38	PT, TOP
40	30.00	244901.48	1184067.37	FG, TOP
41	30.00	244851.48	1184067.56	FG, TOP
42	30.00	244806.14	1184046.48	FG, TOP
43	30.00	244764.35	1184035.97	PC, TOP
44	30.00	244745.14	1184022.76	MID, TOP
45	30.00	244721.83	1184033.68	MID, TOP
46	28.00	244705.81	1184026.75	PT, TOP
47	28.00	244656.70	1184017.33	FG, TOP
48	29.00	244625.75	1184014.21	MID, TOP
49	29.00	244616.03	1183999.14	MID, TOP
50	29.00	244590.29	1184006.19	MID, TOP
51	28.00	244574.85	1184000.80	PT, TOP
52	28.00	244548.75	1183995.34	PC, TOP
53	28.00	244553.39	1184003.65	PT, TOP
54	28.00	244616.53	1184017.19	PT, TOP
55	28.00	244655.09	1184025.50	MID, TOP
56	28.00	244665.30	1184032.56	MID, TOP
57	28.00	244687.77	1184033.47	PT, TOP
58	30.00	244737.42	1184038.89	FG, TOP
59	30.00	244799.92	1184052.75	PC, TOP
60	30.00	244836.45	1184080.67	MID, TOP

GRADING POINTS

Point #	Elevation	Northing	Easting	Description
61	30.00	244857.86	1184077.86	PT, TOP
62	30.00	244907.79	1184075.32	PC, TOP
63	30.00	244964.98	1184057.34	PT, TOP
64	26.00	244815.55	1184078.53	FG, TOP
65	26.00	244824.65	1184103.33	FG, TOP
66	26.00	244811.14	1184151.47	PT, TOP
67	26.00	244771.52	1184181.97	FG, TOP
68	27.00	244737.20	1184200.25	MID, TOP
69	27.00	244689.97	1184183.85	FG, TOP
70	27.00	244662.22	1184142.25	FG, TOP
71	27.00	244647.75	1184124.08	PC, TOP
72	27.00	244640.76	1184118.08	MID, TOP
73	26.00	244626.96	1184116.72	PT, TOP
74	26.00	244605.48	1184111.77	PC, TOP
75	26.00	244579.01	1184101.80	MID, TOP
76	26.00	244562.57	1184101.30	PT, TOP
77	26.00	244532.21	1184098.85	FG, TOP
78	27.00	244661.51	1184158.07	PC, TOP
79	27.00	244696.76	1184193.53	FG, TOP
80	27.00	244732.34	1184205.11	MID, TOP
81	26.00	244745.83	1184199.58	MID, TOP
82	26.00	244798.44	1184168.53	FG, TOP
83	26.00	244829.67	1184125.33	PT, TOP
84	26.00	244830.71	1184112.92	PC, TOP
85	26.00	244838.80	1184095.74	MID, TOP
86	26.00	244477.97	1184033.67	MID, TOP
87	26.00	244474.74	1184056.10	PC, TOP
88	26.00	244485.47	1184078.39	PT, TOP
89	26.00	244514.11	1184096.68	PT, TOP
90	26.00	244514.94	1184093.50	PC, TOP

GRADING POINTS

Point #	Elevation	Northing	Easting	Description
91	26.00	244489.40	1184077.01	PT, TOP
92	26.00	244479.72	1184052.44	PT, TOP
93	26.00	244495.03	1184045.20	PT, TOP
94	27.00	244501.61	1183950.56	PC, TOE
95	27.00	244482.80	1183980.32	PT, TOE
96	26.00	244477.76	1184003.83	FG, TOE
97	29.00	244955.29	1184067.28	PC, TOE
98	28.00	244913.12	1184080.73	FG, TOE
99	26.00	244890.21	1184089.47	FG, TOE
100	25.00	244857.90	1184092.92	PC, TOE
101	24.00	244840.18	1184114.12	PT, TOE
102	25.00	244832.54	1184133.93	MID, TOE
103	24.00	244829.18	1184150.71	MID, TOE
104	25.00	244789.04	1184180.52	MID, TOE
105	25.00	244757.07	1184197.88	PC, TOE
106	25.00	244740.54	1184209.64	PT, TOE
107	26.00	244711.34	1184204.06	FG, TOE
108	26.00	244692.66	1184195.89	PC, TOE
109	26.00	244668.13	1184177.03	PT, TOE
110	23.00	244927.13	1183982.20	PC, TOE
111	23.00	244853.53	1183977.25	MID, TOE
112	23.00	244767.86	1183986.63	MID, TOE
113	23.00	244765.05	1184011.87	MID, TOE
114	23.00	244826.75	1184033.20	PC, TOE
115	23.00	244881.67	1184042.36	PT, TOE
116	23.00	244935.20	1184031.94	MID, TOE
117	23.00	244906.16	1184014.67	AP, TOE
118	23.00	244906.59	1184004.68	AP, TOE
119	25.00	244732.30	1183984.09	MID, TOE
120	25.00	244701.10	1183981.17	MID, TOE

GRADING POINTS

Point #	Elevation	Northing	Easting	Description
121	25.00	244648.66	1183972.34	MID, TOE
122	25.00	244623.34	1183980.26	AP, TOE
123	25.00	244620.91	1183988.18	AP, TOE
124	25.00	244639.09	1184002.60	MID, TOE
125	25.00	244677.81	1184004.69	MID, TOE
126	25.00	244709.05	1184018.14	MID, TOE
127	25.00	244731.21	1184009.60	MID, TOE
128	25.00	244728.46	1183996.86	MID, TOE
129	24.00	244601.48	1183968.12	PT, TOE
130	24.00	244548.98	1183963.84	PC, TOE
131	24.00	244508.07	1184002.65	PT, TOE
132	24.00	244546.62	1184037.47	PC, TOE
133	24.00	244581.18	1184039.98	MID, TOE
134	24.00	244621.51	1184057.42	MID, TOE
135	24.00	244642.19	1184037.20	MID, TOE
136	24.00	244618.87	1184035.31	MID, TOE
137	24.00	244583.33	1184021.98	PC, TOE
138	24.00	244555.23	1184018.13	PT, TOE
139	24.00	244533.86	1183998.18	PC, TOE
140	24.00	244561.62	1183983.05	PT, TOE
141	24.00	244680.14	1184044.32	MID, TOE
142	24.00	244714.74	1184052.95	MID, TOE
143	24.00	244734.35	1184062.77	MID, TOE
144	24.00	244761.41	1184062.62	MID, TOE
145	24.00	244795.05	1184071.36	MID, TOE
146	24.00	244802.14	1184083.13	MID, TOE
147	24.00	244814.18	1184097.52	MID, TOE
148	24.00	244809.11	1184136.82	MID, TOE
149	24.00	244788.10	1184146.86	MID, TOE
150	24.00	244770.27	1184169.70	MID, TOE

GRADING POINTS

Point #	Elevation	Northing	Easting	Description
151	24.00	244737.69	1184163.42	MID, TOE
152	24.00	244692.83	1184167.57	MID, TOE
153	24.00	244678.23	1184128.19	MID, TOE
154	24.00	244651.05	1184114.57	MID, TOE
155	24.00	244653.30	1184092.36	MID, TOE
156	24.00	244686.95	1184100.06	PC, TOE
157	24.00	244765.93	1184129.08	FG, TOE
158	24.00	244783.93	1184111.08	FG, TOE
159	24.00	244772.43	1184094.30	PT, TOE
160	24.00	244731.22	1184082.57	MID, TOE
161	24.00	244699.30	1184069.28	MID, TOE
162	24.00	244674.97	1184068.59	MID, TOE
163	23.00	244635.22	1184090.53	MID, TOE
164	23.00	244556.88	1184073.58	MID, TOE
165	23.00	244524.41	1184069.97	MID, TOE
166	23.00	244498.36	1184062.21	MID, TOE
167	23.00	244526.29	1184086.84	MID, TOE
168	23.00	244553.86	1184089.01	MID, TOE
169	23.00	244581.48	1184090.06	MID, TOE
170	23.00	244612.37	1184102.10	MID, TOE
171	23.00	244634.18	1184106.83	MID, TOE
172	28.00	244749.08	1183992.56	MID, TOP
173	28.00	244742.51	1183996.80	MID, TOP
174	28.00	244747.78	1184002.48	MID, TOP
175	28.00	244754.26	1183998.20	MID, TOP

SITE PREP CONTROL POINTS

Point #	Northing	Easting	Description
SP1	244407.29	1183864.86	AP, C&G
SP2	244406.43	1183892.42	PC, C&G
SP3	244456.92	1183968.67	AP, C&G
SP4	244454.12	1184073.02	AP, C&G, SILT
SP5	244474.71	1184076.44	AP, C&G, SILT
SP6	244494.02	1184085.94	AP, C&G, SILT
SP7	244511.68	1184098.08	AP, C&G, SILT
SP8	244510.65	1184133.42	AP, C&G
SP9	244535.94	1184134.34	AP, C&G
SP10	244539.79	1184100.98	AP, C&G

SITE PREP CONTROL POINTS

Point #	Northing	Easting	Description
SP11	244586.11	1184105.92	AP, C&G, SILT
SP12	244648.04	1184140.93	AP, C&G, SILT
SP13	244686.22	1184223.69	AP, C&G
SP14	244754.24	1184218.60	AP, C&G
SP15	244781.72	1184186.51	AP, C&G
SP16	244843.44	1184154.62	AP, C&G
SP17	244835.08	1184131.64	AP, C&G
SP18	244907.15	1184084.46	AP, C&G
SP19	244955.29	1184067.28	AP, C&G
SP20	244964.98	1184057.34	AP, C&G

SITE PREP CONTROL POINTS

Point #	Northing	Easting	Description
SP21	244968.04	1183976.97	AP, C&G
SP22	244938.99	1183958.08	AP, C&G
SP23	244867.32	1183948.19	AP, C&G
SP24	244851.17	1183937.19	AP, C&G
SP25	244457.97	1183929.19	AP, C&G
SP26	244457.70	1183939.23	AP, C&G
SP27	244430.97	1183883.00	AP, C&G
SP28	244413.40	1183864.88	AP, C&G
SP29	244407.25	1183859.88	AP, SILT
SP30	244404.24	1183979.01	AP, SILT

SITE PREP CONTROL POINTS

Point #	Northing	Easting	Description
SP31	244454.25	1183980.16	AP, SILT
SP32	244451.63	1184072.79	AP, SILT
SP33	244509.15	1184096.34	AP, SILT
SP34	244508.52	1184119.35	AP, SILT
SP35	244438.65	1184105.80	AP, SILT
SP36	244508.36	1184125.54	AP, SILT
SP37	244508.15	1184133.34	AP, SILT
SP38	244538.44	1184134.44	AP, SILT
SP39	244542.30	1184101.05	AP, C&G, SILT
SP40	244685.44	1184226.11	AP, SILT

SITE PREP CONTROL POINTS

Point #	Northing	Easting	Description
SP41	244755.53	1184220.82	AP, SILT
SP42	244783.48	1184188.38	AP, SILT
SP43	244862.83	1184147.91	AP, SILT
SP44	244846.55	1184103.93	AP, C&G, SILT
SP45	244908.00	1184085.78	AP, SILT
SP46	244956.85	1184068.14	AP, SILT
SP47	244975.97	1184048.28	AP, SILT
SP48	244973.23	1184135.06	AP, SILT
SP49	244989.85	1184136.42	AP, SILT
SP50	244852.00	1184125.49	AP, C&G

WEIR POINTS AND ELEVATIONS

Point #	Elevation	Northing	Easting	Description
W1	27.80	244750.83	1183978.17	WEIR
W2	27.80	244749.15	1183992.07	WEIR
W3	27.80	244747.82	1184002.99	WEIR
W4	27.80	244746.14	1184016.88	WEIR
W5	26.20	244623.32	1183977.79	WEIR
W6	26.20	244619.20	1183991.17	WEIR
W7	24.95	244660.71	1184040.95	WEIR
W8	24.95	244654.72	1184053.61	WEIR
W9	24.45	244646.17	1184093.78	WEIR
W10	24.45	244643.57	1184107.54	WEIR

LEGEND:

AP	ANGLE POINT
C&G	CLEAR AND GRUB
FG	FINISHED GRADE
MID	MID-POINT
PC	POINT OF CURVE
PT	POINT OF TANGENCY
SILT	SILT FENCE
TOE	TOE OF SLOPE
TOP	TOP OF SLOPE
WEIR	WEIR CONTROL POINT

Parametrix
4660 KITSAP WAY, SUITE A
BREMERTON, WASHINGTON 98312
T. 360.377.0014 F. 360.479.5961
www.parametrix.com

811 Know what's below. Call before you dig.

BID SET
FEBRUARY 29, 2016

CONTROL POINTS

REVISIONS

No.	BY	DATE	DESCRIPTION

SURVEYED: PMX
DESIGNED: JN
DRAWN: JC
CHECKED: DD
CRP No.
DATE: 02/29/16

JESSE L. NEILSON, STATE OF WASHINGTON, 50736, REGISTERED PROFESSIONAL ENGINEER 2/29/16

KITSAP COUNTY 18 57 WASHINGTON

KITSAP COUNTY
DEPT. OF PUBLIC WORKS
614 DIVISION STREET MS-26
PORT ORCHARD, WA 98366
TEL:(360) 337-5777 FAX:(360) 337-4867

DUWE'IQ STORMWATER TREATMENT WETLAND

POINT TABLES

KITSAP COUNTY, WASHINGTON
SECTION 16, TOWNSHIP 25 NORTH, RANGE 1 EAST, W.M.

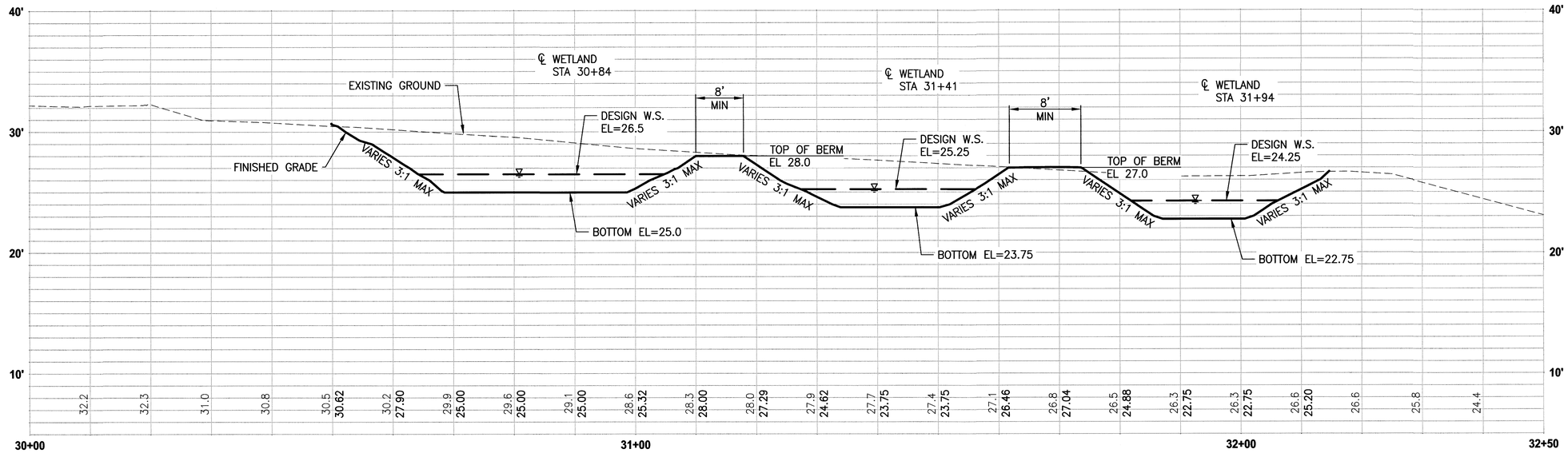

TREATMENT WETLAND
SECTION A/6
HORIZ: 1"=10'
VERT: 1"=5'

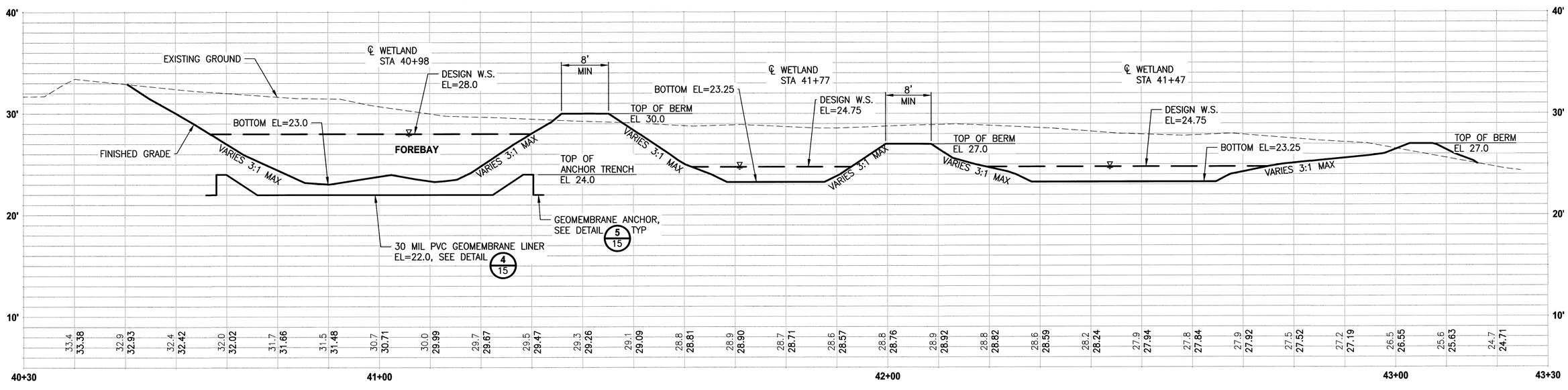

TREATMENT WETLAND
SECTION B/6
HORIZ: 1"=10'
VERT: 1"=5'

BID SET
FEBRUARY 29, 2016

Parametrix
4660 KITSAP WAY, SUITE A
BREMERTON, WASHINGTON 98312
T. 360.377.0014 F. 360.479.5961
www.parametrix.com

811 Know what's below. Call before you dig.

CONTROL POINTS	REVISIONS			
	No.	BY	DATE	DESCRIPTION

SURVEYED:	PMX
DESIGNED:	JN
DRAWN:	JC
CHECKED:	DD
CRP No.	
DATE:	02/29/16

JESSE L. NEILSON — STATE OF WASHINGTON — 50736 — REGISTERED PROFESSIONAL ENGINEER — 2/29/16

KITSAP COUNTY
DEPT. OF PUBLIC WORKS
614 DIVISION STREET MS-26
PORT ORCHARD, WA 98366
TEL:(360) 337-5777 FAX:(360) 337-4867

DUWE'IQ STORMWATER TREATMENT WETLAND

TREATMENT WETLAND SECTIONS

KITSAP COUNTY, WASHINGTON
SECTION 16, TOWNSHIP 25 NORTH, RANGE 1 EAST, W.M.

SHEET 8 OF 21

U:\PSO\PROJECTS\CLIENTS\1578-KitsapCo\2233-1578-55 DuweIqSWTwtnwr\WETLAND\PSO\CS\CADD\DWG\PSO1578-55-C08-09.dwg JASON CERALDE 12:58 PM 2/29/2016

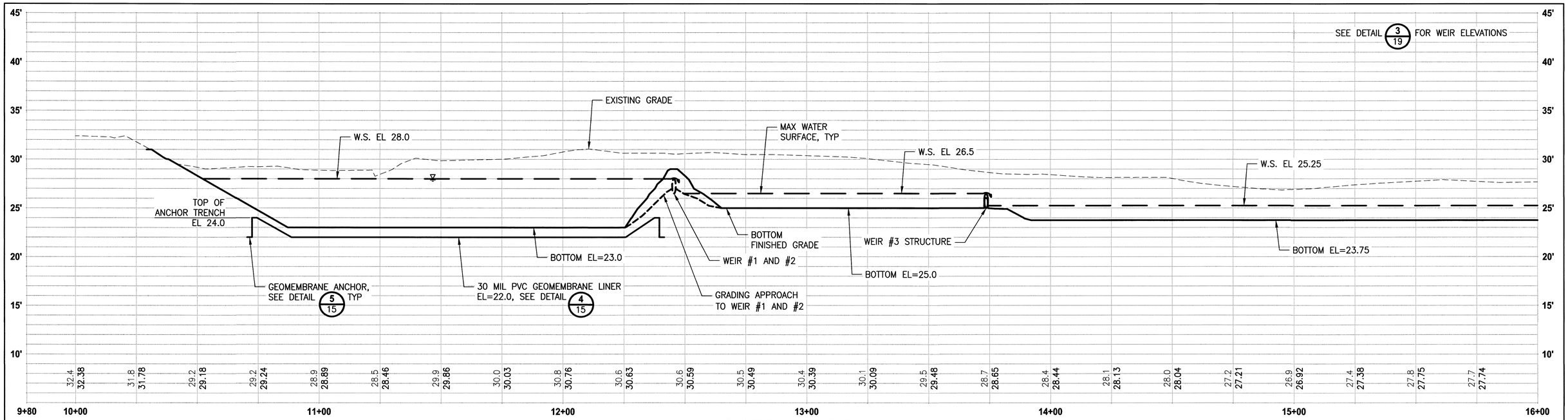

LONGITUDINAL PROFILE

HORIZ: 1"=20'
VERT: 1"=5'

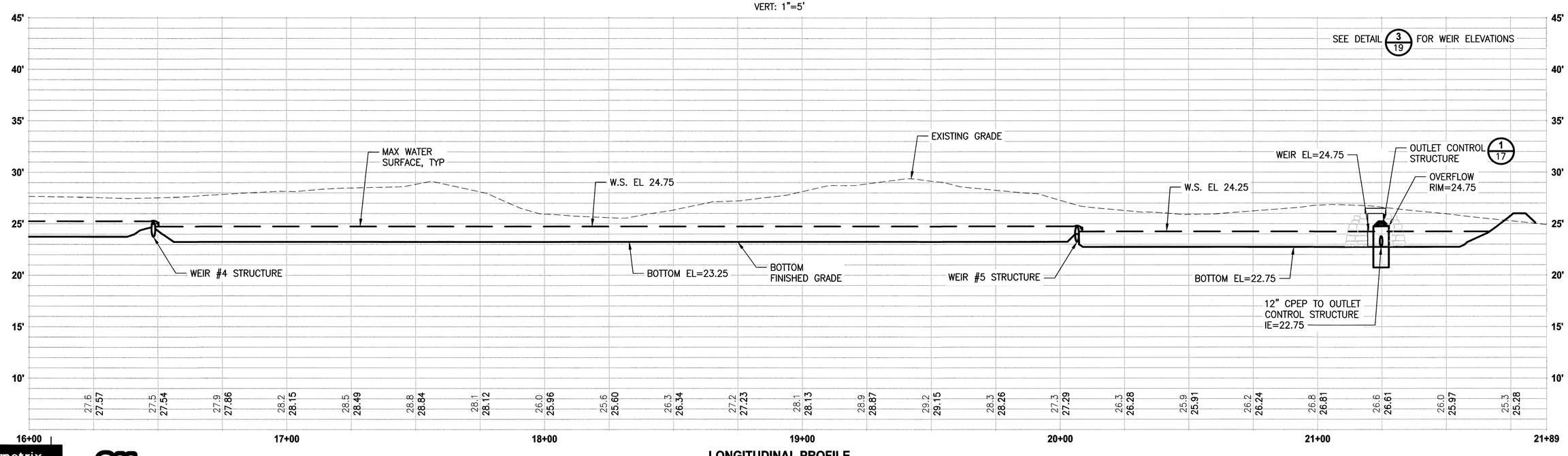

LONGITUDINAL PROFILE

HORIZ: 1"=20'
VERT: 1"=5'

BID SET
FEBRUARY 29, 2016

Parametrix
4660 KITSAP WAY, SUITE A
BREMERTON, WASHINGTON 98312
T. 360.377.0014 F. 360.479.5961
www.parametrix.com

811 Know what's below. Call before you dig.

CONTROL POINTS

REVISIONS

No.	BY	DATE	DESCRIPTION

SURVEYED:	PMX
DESIGNED:	JN
DRAWN:	JC
CHECKED:	DD
CRP No.	
DATE:	02/29/16

JESSE L. NEILSON — STATE OF WASHINGTON — 50736 — REGISTERED PROFESSIONAL ENGINEER — 2/29/16

KITSAP COUNTY
DEPT. OF PUBLIC WORKS
614 DIVISION STREET MS-26
PORT ORCHARD, WA 98366
TEL:(360) 337-5777 FAX:(360) 337-4867

DUWE'IQ STORMWATER TREATMENT WETLAND

TREATMENT WETLAND LONGITUDINAL PROFILE

KITSAP COUNTY, WASHINGTON
SECTION 16, TOWNSHIP 25 NORTH, RANGE 1 EAST, W.M.

SHEET 9 OF 21

U:\PSU\Proj\C75\C1-075-178-4\Plsh\C0225-178-13 DUWE-WSV Tlm\WETLAND\PSD\178.13-C06-09.DWG JASON GERALDE 02:58 PM 2/29/2016

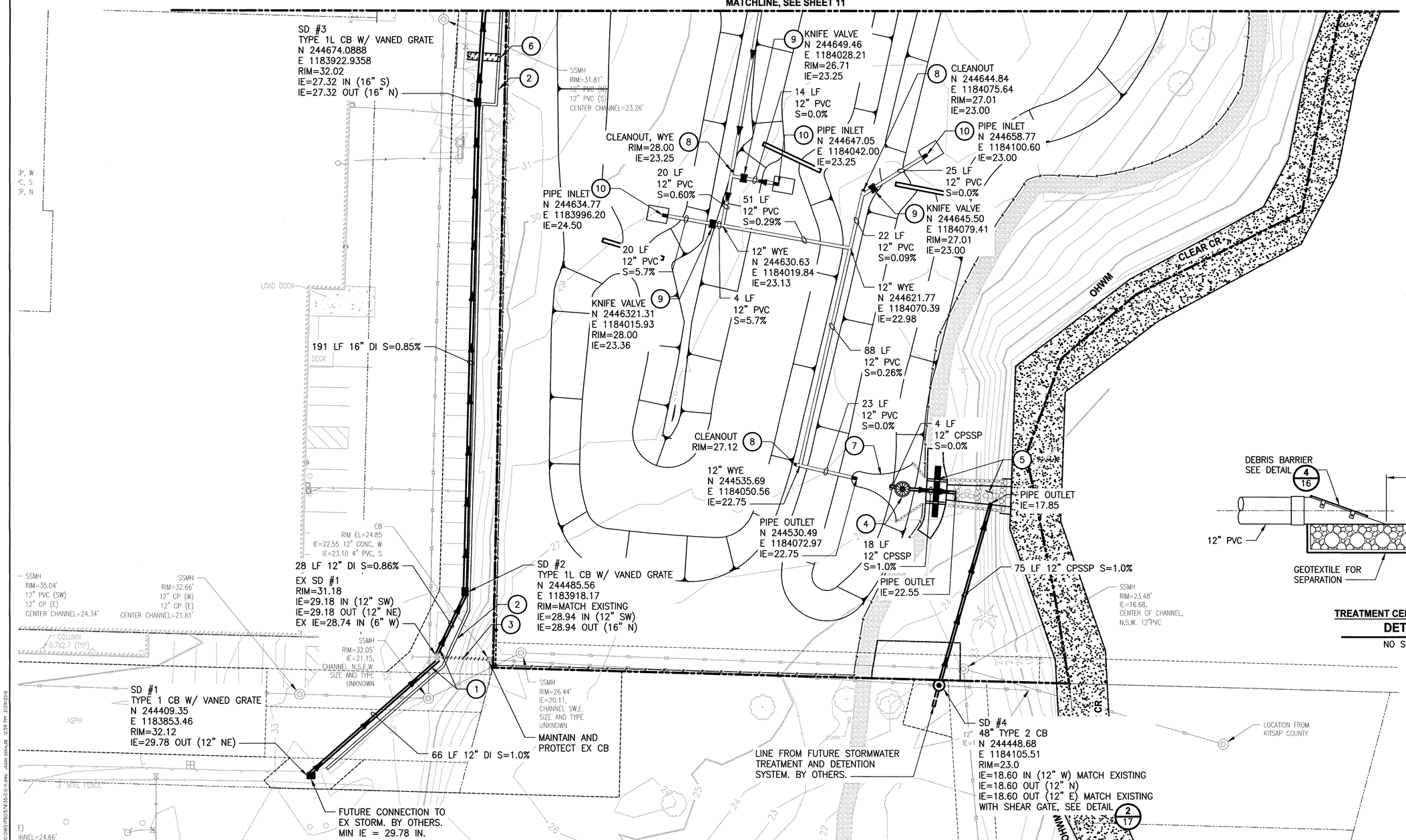

NOTES:

1. KITSAP COUNTY HAS POTHOLED POTENTIAL CONFLICTS WITH EXISTING UTILITIES. THIS INFORMATION IS AVAILABLE TO THE CONTRACTOR AND SHALL BE COORDINATED PER WSDOT STD SPEC 1-07.17(1) AND 1-07.17(2).

STORM KEY NOTES:

1. CONNECTION TO DRAINAGE STRUCTURE.
2. ASPHALT WEDGE CURB, SEE DETAIL 3/15
3. ABANDON EX PIPE IN PLACE, FILL WITH CDF. PLUG END WITH CONCRETE.
4. EMERGENCY OVERFLOW STRUCTURE, SEE DETAIL 1/17
5. PRECAST CONCRETE CULVERT AND DISCHARGE SPILLWAY, SEE PLAN AND PROFILE SHEET 12.
6. SAW CUT FROM HYDRANT BASE TO EDGE OF CONCRETE (3' WIDE). SILVERDALE WATER DISTRICT TO INSTALL TEMPORARY IRRIGATION METER. CONTRACTOR TO COORDINATE.
7. STREAMBED AGGREGATE, SEE SHEET 12.
8. 12" CLEAN OUT, SEE DETAIL 1/11
9. 12" KNIFE VALVE, SEE DETAIL 2/11
10. TREATMENT CELL DRAIN INLET, SEE DETAIL 1/–

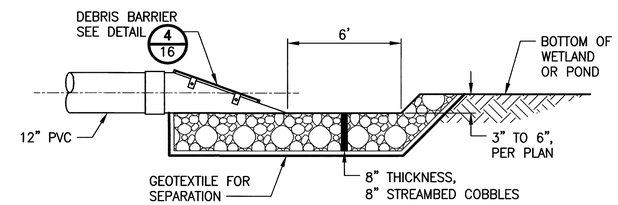

TREATMENT CELL DRAIN INLET
DETAIL 1/10,11
NO SCALE

SOUTH COLLECTION AND CONVEYANCE
PLAN
SCALE IN FEET
0 20 40
N

Parametrix
4660 KITSAP WAY, SUITE A
BREMERTON, WASHINGTON 98312
T. 360.377.0014 F. 360.479.5961
www.parametrix.com

811 Know what's below. Call before you dig.

BID SET
FEBRUARY 29, 2016

CONTROL POINTS

REVISIONS

No.	BY	DATE	DESCRIPTION

SURVEYED:	PMX
DESIGNED:	JN
DRAWN:	JC
CHECKED:	DD
CRP No.	
DATE:	02/29/16

JESSE L. NEILSON, STATE OF WASHINGTON, 50736, REGISTERED PROFESSIONAL ENGINEER, 02/29/16

KITSAP COUNTY 1857 WASHINGTON
KITSAP COUNTY
DEPT. OF PUBLIC WORKS
614 DIVISION STREET MS-26
PORT ORCHARD, WA 98366
TEL:(360) 337-5777 FAX:(360) 337-4867

DUWE'IQ STORMWATER TREATMENT WETLAND

SOUTH COLLECTION AND CONVEYANCE PLAN

KITSAP COUNTY, WASHINGTON
SECTION 16, TOWNSHIP 25 NORTH, RANGE 1 EAST, W.M.

U:\PSO\Projects\Clients\378-KitsapCo\235-5178-35 DuWE'qSWTR Imp'MT\Wetland\WPSovis\CADD\DWG\PSO5178.35-C0-1.dwg JASON CERVLUE 12:59 PM 2/29/2016

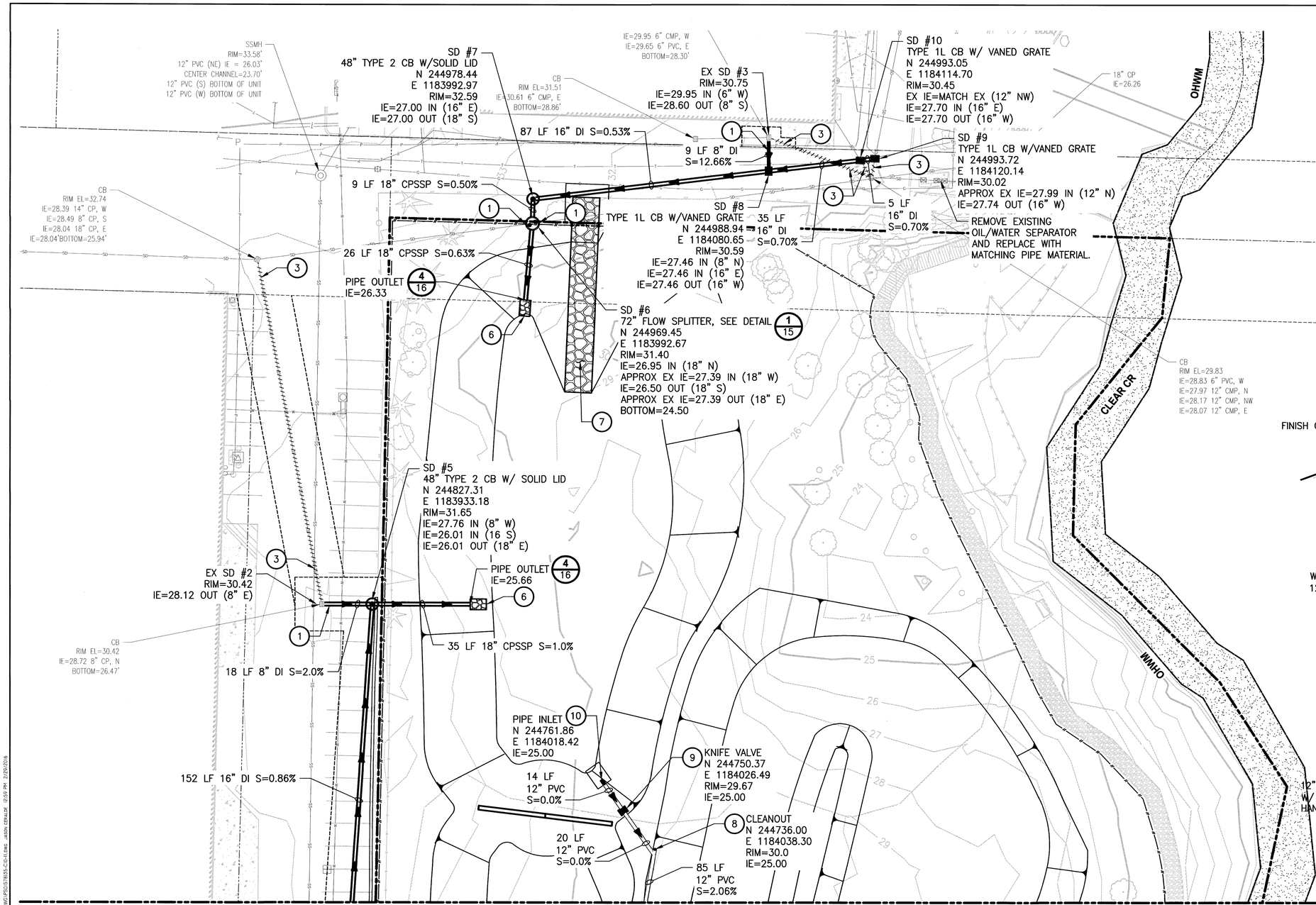

MATCHLINE, SEE SHEET 10

NORTH COLLECTION AND CONVEYANCE PLAN

SCALE IN FEET 0 20 40

N

NOTES:

1. KITSAP COUNTY HAS POTHOLED POTENTIAL CONFLICTS WITH EXISTING UTILITIES. THIS INFORMATION IS AVAILABLE TO THE CONTRACTOR AND SHALL BE COORDINATED PER WSDOT STD SPEC 1-07.17(1) AND 1-07.17(2).

STORM KEY NOTES:

1. CONNECTION TO DRAINAGE STRUCTURE.
2. ASPHALT WEDGE CURB, SEE DETAIL 3/15
3. ABANDON EX PIPE IN PLACE, FILL WITH CDF. PLUG END WITH CONCRETE.
4. EMERGENCY OVERFLOW STRUCTURE, SEE DETAIL 1/17
5. PRECAST CONCRETE CULVERT AND DISCHARGE SPILLWAY, SEE PLAN AND PROFILE SHEET 18.
6. OUTFALL PROTECTION, SEE DETAIL 2/18
7. MIN. 1' THICK 8" STREAMBED COBBLES PER WSDOT STD SPEC 9-03.11(2). PLACE GEOTEXTILE BELOW FOR SEPARATION.
8. 12" CLEAN OUT, SEE DETAIL 1/–
9. 12" KNIFE VALVE, SEE DETAIL 2/–
10. 12" PIPE INLET, SEE DETAIL 1/10

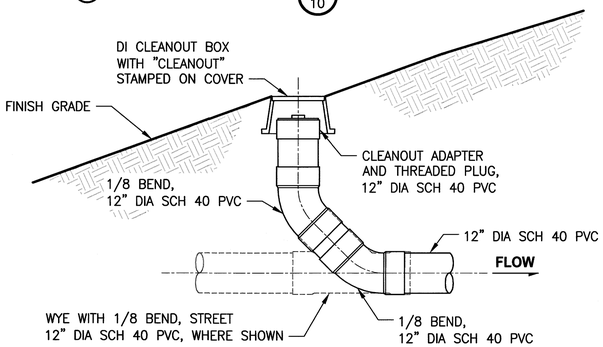

CLEANOUT NOTES:

1. CLEANOUT TO MATCH PIPE SIZE IN PLANS.
2. CLEANOUT BOX TO BE GREEN, BROWN, OR BLACK.

12" PVC CLEANOUT WITH BOX
DETAIL 1/10,11
NO SCALE

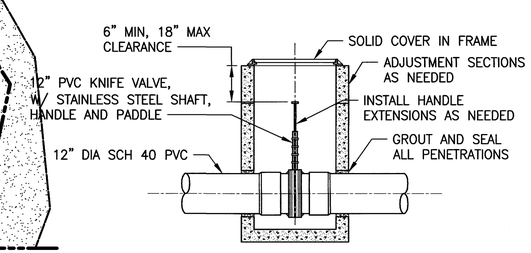

KNIFE VALVE IN CONCRETE INLET
DETAIL 2/10,11
NO SCALE

BID SET
FEBRUARY 29, 2016

Parametrix
4660 KITSAP WAY, SUITE A
BREMERTON, WASHINGTON 98312
T. 360.377.0014 F. 360.479.5961
www.parametrix.com

811 Know what's below. Call before you dig.

CONTROL POINTS

REVISIONS

No.	BY	DATE	DESCRIPTION

SURVEYED: PMX
DESIGNED: JN
DRAWN: JC
CHECKED: DD
CRP No.
DATE: 02/29/16

JESSE L. NEILSON, STATE OF WASHINGTON, 50736, REGISTERED PROFESSIONAL ENGINEER, 3/29/16

KITSAP COUNTY
DEPT. OF PUBLIC WORKS
614 DIVISION STREET MS-26
PORT ORCHARD, WA 98366
TEL:(360) 337-5777 FAX:(360) 337-4867

DUWE'IQ STORMWATER TREATMENT WETLAND

NORTH COLLECTION AND CONVEYANCE PLAN

KITSAP COUNTY, WASHINGTON
SECTION 16, TOWNSHIP 25 NORTH, RANGE 1 EAST, W.M.

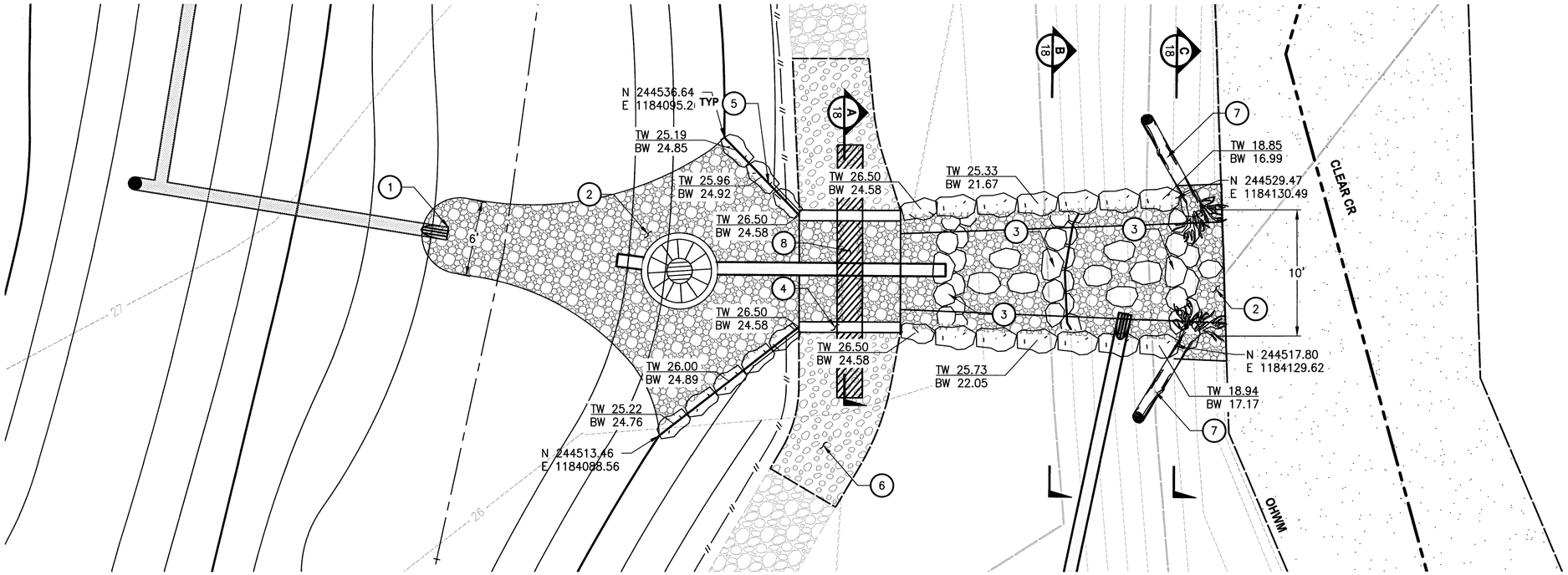

SPILLWAY
PLAN
SCALE IN FEET
0 5 10

SPILLWAY KEY NOTES:

1. PIPE INLET GRATE, SEE DETAIL 4/16
2. STREAMBED AGGREGATE, SEE NOTE 1.
3. 1-MAN (12"-18") TO 2-MAN (18"-28") STREAMBED BOULDER RIFFLE.
4. 8' SPAN x 8' LONG PRECAST CONCRETE CULVERT, SEE SHEET 18.
5. ROCK WALL, SEE DETAIL 3/18
6. CRUSHED ROCK PAVING WITH GEOTEXTILE, SEE DETAIL 1/18
7. HABITAT LOG WITH ROOT WAD, MIN 24" DIA, 12' LENGTH. EMBED LOG ENDS MIN 4' AND ANCHOR WITH BOULDERS AS SHOWN.
8. 24" CLASS 3000 CEMENT CONCRETE WEIR WALL AND CUTOFF WALL, SEE SECTION A/18

NOTES:

1. STREAMBED AGGREGATE SHALL CONSIST OF A MIXTURE OF 60% STREAMBED SEDIMENT AND 40% 12" STREAMBED COBBLES GRADATION (BY VOLUME).
2. STREAMBED BOULDER RIFFLES SHALL CONSIST OF 50% 1-MAN AND 50% 2-MAN BOULDERS.

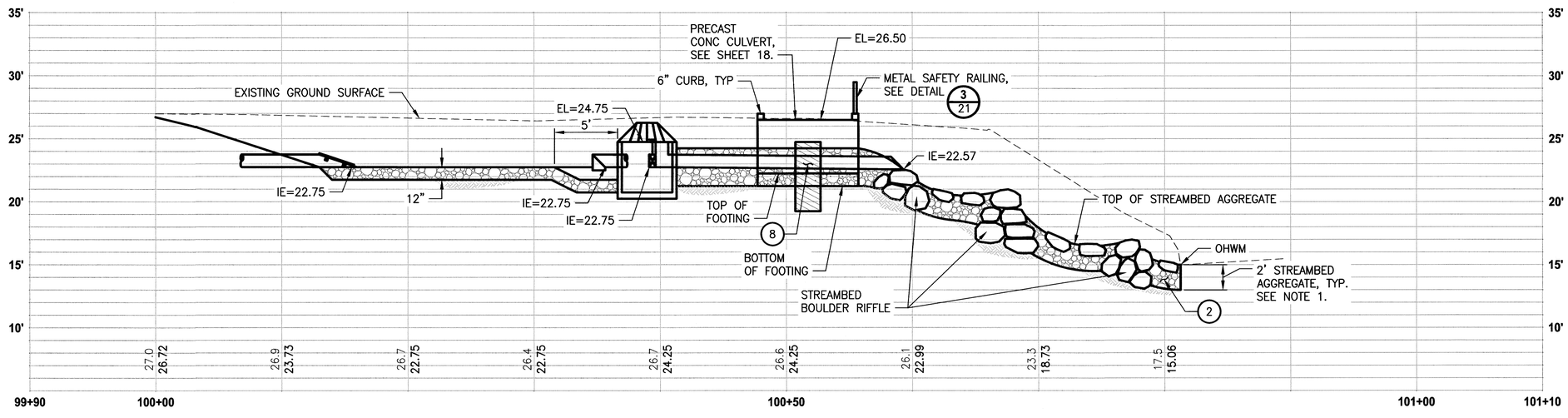

PROFILE
HORIZ: 1"=5'
VERT: 1"=5'

Parametrix
4660 KITSAP WAY, SUITE A
BREMERTON, WASHINGTON 98312
T. 360.377.0014 F. 360.479.5961
www.parametrix.com

811 Know what's below. Call before you dig.

BID SET
FEBRUARY 29, 2016

CONTROL POINTS	REVISIONS				
	No.	BY	DATE	DESCRIPTION	

SURVEYED: PMX
DESIGNED: DD
DRAWN: JC
CHECKED: JN
CRP No.
DATE: 02/29/16

DAVID L. DINKUHN — STATE OF WASHINGTON — 35614 — REGISTERED PROFESSIONAL ENGINEER — 3/4/16

KITSAP COUNTY
DEPT. OF PUBLIC WORKS
614 DIVISION STREET MS-26
PORT ORCHARD, WA 98366
TEL:(360) 337-5777 FAX:(360) 337-4867

DUWE'IQ STORMWATER TREATMENT WETLAND

SPILLWAY PLAN AND PROFILE

KITSAP COUNTY, WASHINGTON
SECTION 16, TOWNSHIP 25 NORTH, RANGE 1 EAST, W.M.

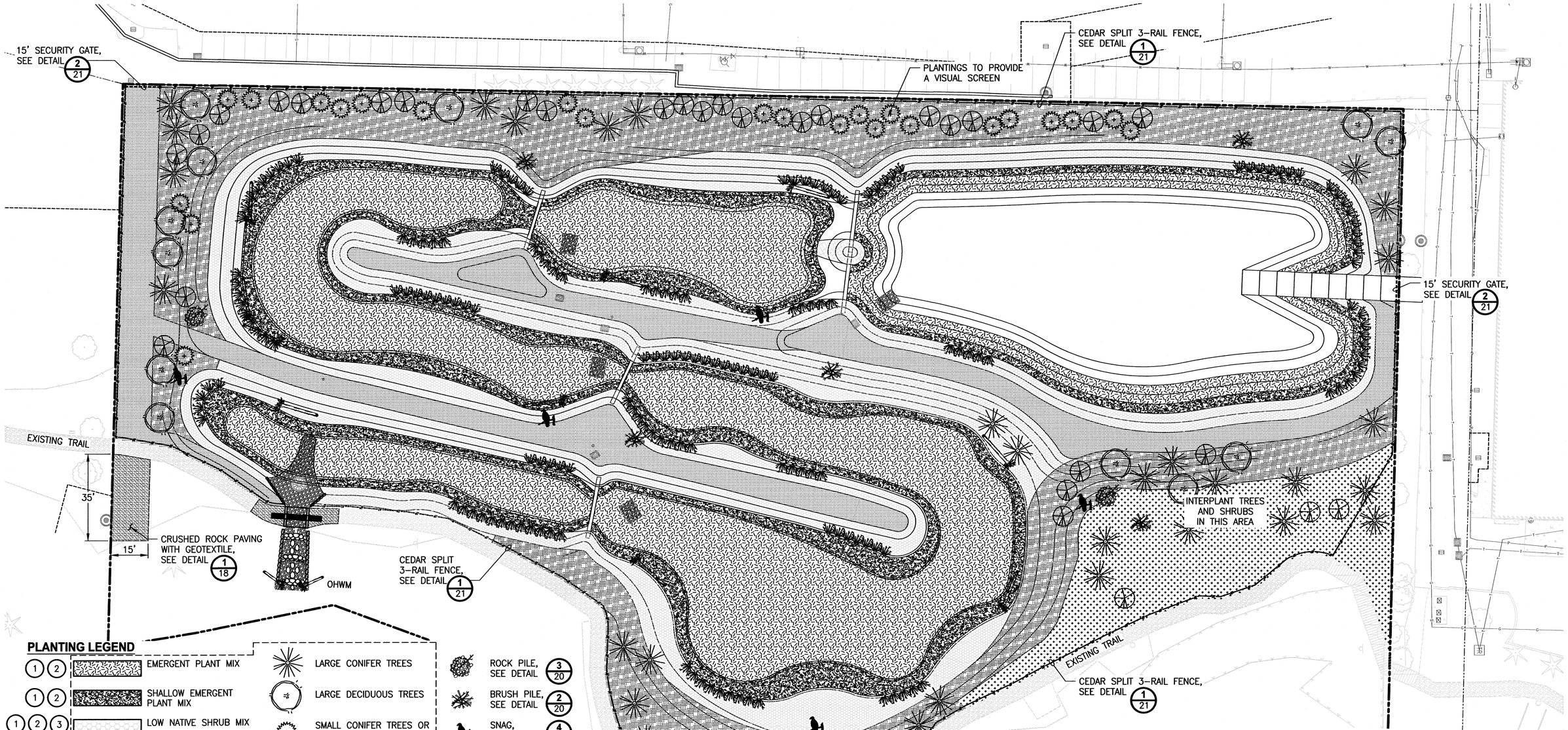

PLANTING LEGEND

- (1)(2) EMERGENT PLANT MIX
- (1)(2) SHALLOW EMERGENT PLANT MIX
- (1)(2)(3) LOW NATIVE SHRUB MIX
- (1)(2)(3) NATIVE SHRUB MIX
- (3)(4) INFILL SHRUB PLANT MIX–CONTROL WEEDS, MULCH AREA, AND INFILL PLANT TREES AND SHRUBS
- NATIVE GRASS
- LARGE CONIFER TREES
- LARGE DECIDUOUS TREES
- SMALL CONIFER TREES OR LARGE EVERGREEN SHRUBS
- SMALL DECIDUOUS TREES
- LIVE STAKES
- EXISTING TREES
- ROCK PILE, SEE DETAIL 3/20
- BRUSH PILE, SEE DETAIL 2/20
- SNAG, SEE DETAIL 4/20
- ANCHORED HABITAT LOG, SEE DETAIL 1/20

PLANTING BY OTHERS, NOT INCLUDED IN THIS CONTRACT. CONTRACTOR SHALL PROVIDE ACCESS AND COORDINATE WITH OTHERS DURING PLANTING.

PLANTING PLAN

SCALE IN FEET 0 20 40

CONSTRUCTION NOTES:

1. SOIL AMENDMENT. PLACE 6" TOPSOIL TYPE A AND TILL INTO SOIL TO A DEPTH OF 10" IN THIS PLANTING AREA. SEE DETAIL 7/14
2. FINE COMPOST. PRIOR TO PLANTING AND PLACEMENT OF MULCH PLACE 1" COMPOST OVER ENTIRE SURFACE OF THIS PLANTING AREA.
3. WOOD CHIP MULCH. PLACE 3" LAYER WOOD CHIP MULCH OVER THE ENTIRE SURFACE OF THIS PLANTING AREA PRIOR TO PLANTING.
4. CONTRACTOR SHALL PROVIDE MULCH TO OTHERS FOR INSTALLATION.

NOTES

1. SEE SHEET 14 FOR PLANTING DETAILS AND PLANT LIST.
2. LOOSEN ANY SOILS IN PLANTING AREAS COMPACTED BY CONSTRUCTION ACTIVITIES BY RIPPING OR TILLING THE AREA TO A DEPTH OF 12". NOT TO EXCEED A DEPTH OF 21.5' ELEVATION.
3. STABILIZE ANY DISTURBED AREAS OUTSIDE OF THE PROJECT BOUNDARY AREA AND SEED WITH NATIVE GRASS MIX.

BID SET
FEBRUARY 29, 2016

Parametrix
4660 KITSAP WAY, SUITE A
BREMERTON, WASHINGTON 98312
T. 360.377.0014 F. 360.479.5961
www.parametrix.com

811 Know what's below. Call before you dig.

CONTROL POINTS	REVISIONS			
	No.	BY	DATE	DESCRIPTION

SURVEYED: PMX
DESIGNED: JS
DRAWN: JC
CHECKED: JN
CRP No.
DATE: 02/29/16

STATE OF WASHINGTON REGISTERED LANDSCAPE ARCHITECT
JENS JENSON
CERTIFICATE NO. 656

KITSAP COUNTY 1857 WASHINGTON

KITSAP COUNTY
DEPT. OF PUBLIC WORKS
614 DIVISION STREET MS-26
PORT ORCHARD, WA 98366
TEL:(360) 337-5777 FAX:(360) 337-4867

DUWE'IQ STORMWATER TREATMENT WETLAND
PLANTING PLAN

KITSAP COUNTY, WASHINGTON
SECTION 16, TOWNSHIP 25 NORTH, RANGE 1 EAST, W.M.

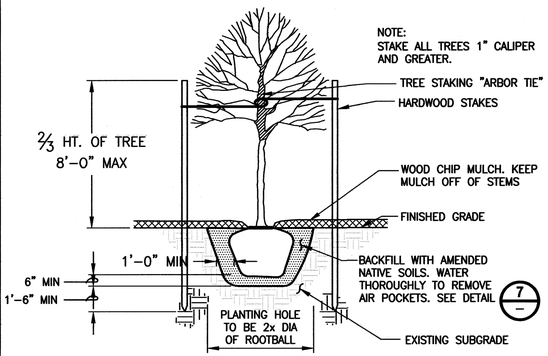

DECIDUOUS TREE PLANTING DETAIL

DETAIL 1

NO SCALE

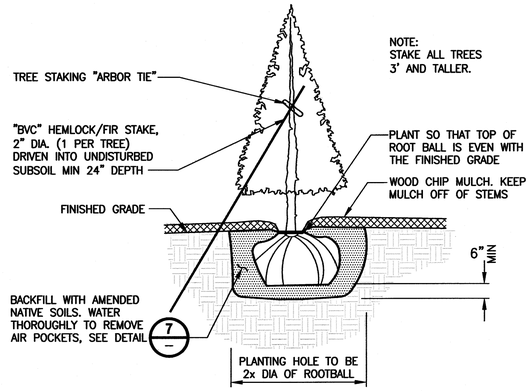

CONIFEROUS TREE PLANTING

DETAIL 2

NO SCALE

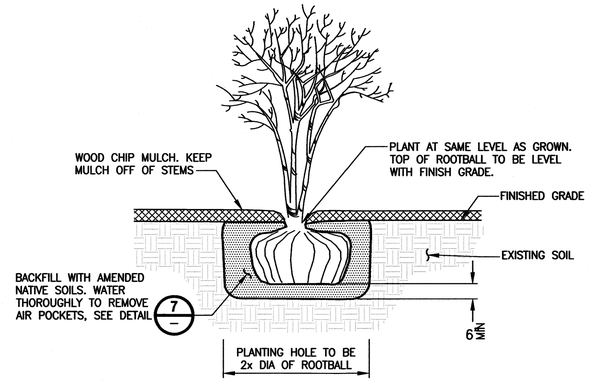

SHRUB AND SMALL TREE PLANTING

DETAIL 3

NO SCALE

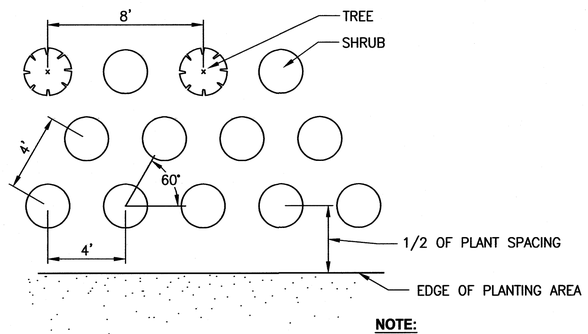

TYPICAL TREE AND SHRUB SPACING

DETAIL 4

NO SCALE

NOTE:

PLANT SHRUBS IN SINGLE SPECIES GROUPS OF 7 TO 12 PLANTS EACH PLANT TREES IN SINGLE SPECIES GROUPS OF 1 TO 5 PLANTS EACH.

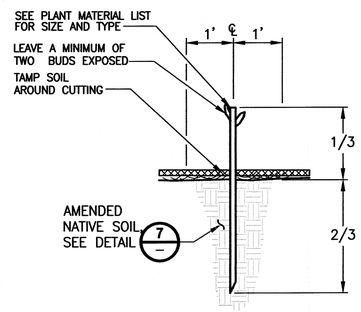

LIVE STAKE INSTALLATION

DETAIL 5

NO SCALE

NOTES:

1. LEAVES AND ROOT CROWN TO REMAIN UNDAMAGED DURING PLANTING.
2. CREATE PLANTING HOLE BY DRIVING STEEL SPIKE INTO SOIL AND WORKING SPIKE TO WIDEN HOLE.

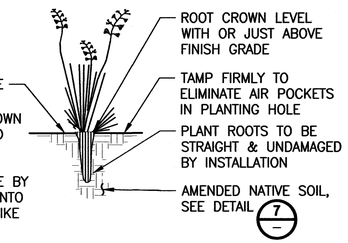

PLUG OR BAREROOT PLANTING

DETAIL 6

NO SCALE

STEP 1

TILL TOPSOIL TYPE A INTO TOP 10" OF FILL OR NATIVE SOIL IN PLANTING ZONES AFTER CLEARING AND GRUBBING.

STEP 2

INSTALL 1" FINE COMPOST OVER PLANTING AREA.

STEP 3

INSTALL PLANTS.

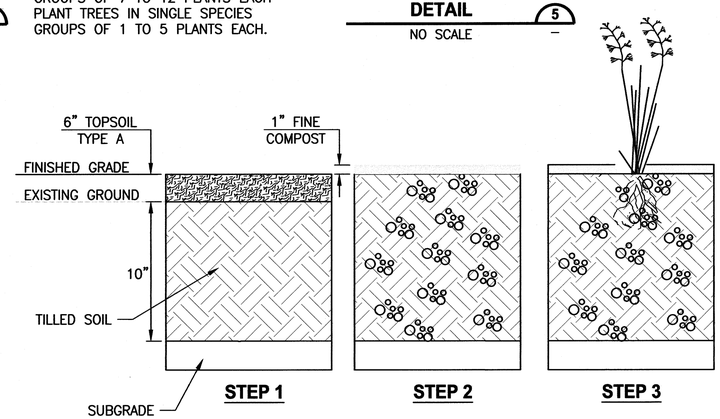

PLANTING AREA SOIL AMENDMENT-SEQUENCE OF WORK

DETAIL 7

NO SCALE

PLANTING CONSTRUCTION NOTES:

1. PRIOR TO CONSTRUCTION, CLEARING LIMITS SHALL BE CLEARLY IDENTIFIED. THE ENGINEER SHALL VERIFY AND APPROVE PRIOR TO CONSTRUCTION.
2. CONTRACTOR SHALL ARRANGE TO MEET ON SITE WITH ENGINEER TO DISCUSS LIMITS OF WORK AND METHODS. CONSTRUCTION ACTIVITIES SHALL NOT COMMENCE UNTIL ACCESS, LIMITS OF WORK, AND METHODS ARE APPROVED.
3. PLANTING PLANS REPRESENT A CONCEPTUAL PLANT LAYOUT. FINAL PLANT LOCATIONS SHALL BE APPROVED BY ENGINEER PRIOR TO PLANTING.
4. USE ONLY HAND TOOLS TO CLEAR AND CULTIVATE SOIL UNDER THE CANOPY (WITHIN AND 5' OUTSIDE THE DRIPLINE) OF EXISTING TREES.
5. ALL PLANTS SHALL BE NURSERY GROWN A MINIMUM OF ONE YEAR. PLANT MATERIAL IS TO BE SUPPLIED BY COMMERCIAL NURSERIES THAT SPECIALIZE IN PLANTS NATIVE TO THE PACIFIC NORTHWEST. PLANT SUBSTITUTIONS ARE SUBJECT TO APPROVAL BY ENGINEER.
6. PLANTING SHALL TAKE PLACE DURING THE DORMANT SEASON (NOVEMBER 1ST TO FEBRUARY 28TH). PLANTING MAY BE ALLOWED AT OTHER TIMES AFTER REVIEW AND WRITTEN APPROVAL BY ENGINEER.

PLANT LIST

QTY	BOTANICAL NAME	COMMON NAME	MINIMUM SIZE	SPACING FT O.C.	NOTES
	Large Conifer Trees				
20	PICEA SITCHENSIS	SITKA SPRUCE	4' TALL	AS SHOWN	
24	PSUEDOTSUGA MENZIESII	DOUGLAS FIR	4' TALL	AS SHOWN	
20	THUJA PLICATA	WESTERN RED CEDAR	4' TALL	AS SHOWN	
	Large Deciduous Trees				
5	ACER MACROPHYLLUM	BIG-LEAF MAPLE	1" CAL.	AS SHOWN	
5	FRAXINUS LATIFOLIA	OREGON ASH	1" CAL.	AS SHOWN	
2	POPULUS BALSAMIFERA	BLACK COTTONWOOD	1" CAL.	AS SHOWN	
5	SALIX SCOULERIANA	SCOULER'S WILLOW	1" CAL.	AS SHOWN	
	Small Deciduous Trees				
20	ACER CIRCINATUM	VINE MAPLE	6' HT.	AS SHOWN	
3	CORNUS NUTTALLII	WESTERN DOGWOOD	6' HT.	AS SHOWN	
5	CRATAEGUS DOUGLASII	BLACK HAWTHORNE	6' HT.	AS SHOWN	
5	MALUS FUSCA	PACIFIC CRABAPPLE	6' HT.	AS SHOWN	
	SMALL CONIFER TREES OR LARGE EVERGREEN SHRUBS				
12	PINUS CONTORTA 'CONTORTA'	SHORE PINE	#5 CONT.	AS SHOWN	
11	MORELLA CALIFORNICA	PACIFIC WAX MYRTLE	#5 CONT.	AS SHOWN	
	Infill Shrub Plant Mix				
40	HOLODISCUS DISCOLOR	OCEAN SPRAY	#2 CONT.	SPACE SHRUBS 5' O.C.	PLANT IN SINGLE SPECIES GROUPS OF 2 TO 12
54	OEMLARIA CERASIFORMUS	INDIAN PLUM	#2 CONT.		
54	ROSA NUTKANA	NOOTKA ROSE	#2 CONT.		
54	SYMPHORICARPOS ALBUS	SNOWBERRY	#2 CONT.		
	Native Shrub Mix				
81	LONICERA INVOLUCRATA	TWINBERRY	#2 CONT.	SPACE SHRUBS 5' O.C.	PLANT IN SINGLE SPECIES GROUPS OF 2 TO 12
94	OEMLARIA CERASIFORMUS	INDIAN PLUM	#2 CONT.		
94	PHYSOCARPUS CAPITATUS	PACIFIC NINEBARK	#2 CONT.		
161	ROSA PISOCARPA	CLUSTERED ROSE	#2 CONT.		
108	SYMPHORICARPOS ALBUS	SNOWBERRY	#2 CONT.		
	Live Stakes				
167	CORNUS SERICEA	RED-OSIER DOGWOOD	1/2"x36" LIVE STAKE	SPACE LIVESTAKES 4' O.C.	PLACE 2 STAGGERED ROWS 3' APART
167	SALIX GEYERIANA	GEYERS WILLOW	1/2"x36" LIVE STAKE		
	Low Native Shrub Mix				
186	BLECHNUM SPICANT	DEER FERN	#1 CONT.	SPACE 3' O.C.	PLANT IN SINGLE SPECIES GROUPS OF 3 TO 8
742	GAULTHERIA SHALLON	SALAL	#1 CONT.		
464	MAHONIA NERVOSA	LOW OREGON GRAPE	#1 CONT.		
464	POLYSTHICUM MUNITUM	SWORD FERN	#1 CONT.		
	Shallow Emergent Plant Mix				
1,029	CAREX STIPATA	SAWBEAK SEDGE	PLUG	SPACE 12" O.C.	PLANT IN SINGLE SPECIES GROUPS OF 5 TO 25 EMERGENT DEPTH 0"-12"
2,058	ELEOCHARIS PALUSTRIS	SPIKE RUSH	PLUG		
2,058	GLYCERIA OCCIDENTALIS	WESTERN MANNAGRASS	PLUG		
1,029	JUNCUS TENUIS	SLENDER RUSH	PLUG		
515	OENANTHE SARMENTOSA	WATER PARSLEY	PLUG		
515	SAGITTARIA LATIFOLIA	ARROWHEAD	PLUG		
1,029	SCIRPUS ATROCINCTUS	WOOLGRASS	PLUG		
2,058	SCIRPUS MICROCARPUS	SMALL-FRUITED BULRUSH	PLUG		
	Emergent Plant Mix				
1,246	ALISMA PLANTAGO-AQUATICA	WATER PLANTAIN	PLUG	SPACE 12" O.C.	PLANT IN SINGLE SPECIES GROUPS OF 5 TO 25 *EMERGENT DEPTH 12"-18" OR UP TO 36" DEPTH
6,231	CAREX OBNUPTA*	SLOUGH SEDGE	PLUG		
1,246	ELEOCHARIS PALUSTRIS*	SPIKE RUSH	PLUG		
1,246	JUNCUS EFFUSUS*	SOFT RUSH	PLUG		
6,231	SCIRPUS ACUTUS	HARDSTEM BULRUSH	PLUG		
6,231	SCIRPUS VALIDUS	SOFTSTEM BULRUSH	PLUG		
2,492	SPARGANIUM EMMERSUM	BUR REED	PLUG		

7. THE CONTRACTOR SHALL BE RESPONSIBLE FOR DISPOSING OF ALL DEBRIS AND EXCESS SOIL OCCASIONED BY THIS PROJECT.
8. CONTRACTOR SHALL VERIFY THE LOCATION OF ALL UTILITIES PRIOR TO EXCAVATION.
9. AREAS DISTURBED BY CONSTRUCTION ACTIVITIES AND NOT SHOWN TO BE RE-VEGETATED ON THESE PLANS SHALL BE RESTORED AND SEEDED.
10. DISCREPANCIES BETWEEN THE PLANS AND SITE CONDITIONS SHALL BE BROUGHT TO THE ATTENTION OF THE ENGINEER PRIOR TO PROCEEDING.
11. CONTRACTOR SHALL BE RESPONSIBLE FOR WATERING PLANTS AFTER INSTALLATION. KITSAP COUNTY WILL MAKE PROVISIONS FOR WATERING FOLLOWING COMPLETION OF CONSTRUCTION.

BID SET

FEBRUARY 29, 2016

Parametrix
4660 KITSAP WAY, SUITE A
BREMERTON, WASHINGTON 98312
T. 360.377.0014 F. 360.479.5961
www.parametrix.com

811 Know what's below. Call before you dig.

CONTROL POINTS

REVISIONS

No.	BY	DATE	DESCRIPTION

SURVEYED: PMX
DESIGNED: JS
DRAWN: JC
CHECKED: JN
CRP No.
DATE: 02/29/16

STATE OF WASHINGTON REGISTERED LANDSCAPE ARCHITECT
JENS SWENSON
CERTIFICATE NO. 656

KITSAP COUNTY
DEPT. OF PUBLIC WORKS
614 DIVISION STREET MS-26
PORT ORCHARD, WA 98366
TEL:(360) 337-5777 FAX:(360) 337-4867

DUWE'IQ STORMWATER TREATMENT WETLAND

PLANTING NOTES & DETAILS

KITSAP COUNTY, WASHINGTON
SECTION 16, TOWNSHIP 25 NORTH, RANGE 1 EAST, W.M.

U:\PSO\Projects\Clients\1578-KitsapCo\233-1578-35 Duwe'qbw\TechWetland\PS\civil\CADD\DWG\PSO1578135-C15-L-LS.dwg JASON GERALDE 1:00 PM 2/29/2016

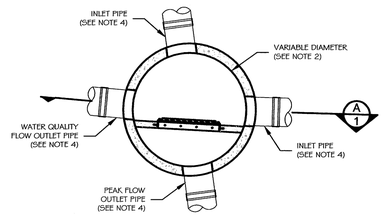

STORMGATE MANHOLE - PLAN VIEW (1/1)

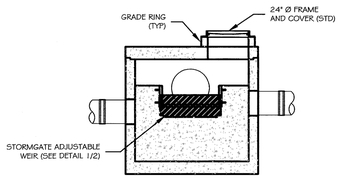

STORMGATE MANHOLE - SECTION VIEW (A/1)

©2012 CONTECH Engineered Solutions, LLC

CONTECH ENGINEERED SOLUTIONS LLC

STORMGATE MANHOLE HIGH FLOW BYPASS
PLAN AND SECTION VIEWS
STANDARD DETAIL

DRAWING 1 / 10

DATE: 04/04/06 | SCALE: NONE | FILE NAME: SG-MH-DTL | DRAWN: MJW | CHECKED: ARG

GENERAL NOTES

1) STORMGATE BY CONTECH STORMWATER SOLUTIONS; PORTLAND, OR (800) 548-4667; SCARBOROUGH, ME (877) 907-8676; LINTHICUM, MD (866) 740-3318.
2) PRECAST MANHOLE TO BE CONSTRUCTED IN ACCORDANCE WITH ASTM C478. DETAIL DRAWING REFLECTS DESIGN INTENT ONLY. ACTUAL DIMENSIONS AND CONFIGURATION OF STRUCTURE WILL BE SHOWN ON PRODUCTION SHOP DRAWING.
3) STRUCTURE AND ACCESS COVERS TO MEET AASHTO H-20 LOAD RATING.
4) INLET AND OUTLET PIPING TO BE SPECIFIED BY ENGINEER AND PROVIDED BY CONTRACTOR. PRECAST STORMGATE MANHOLE EQUIPPED WITH EITHER CORED OPENINGS OR KNOCKOUTS AT INLET AND OUTLET LOCATIONS.
5) CONTRACTOR TO ADJUST WEIR TO DESIGN ELEVATION SPECIFIED IN DATA TABLE BELOW. DO NOT EXCEED 5.0 FT-LBS TORQUE WHEN TIGHTENING SCREWS ON WEIR FRAME. SEAL WEIR TO FRAME WITH RTV SILICONE SEALANT AFTER FINAL ADJUSTMENT.

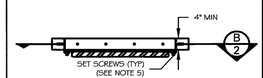

WEIR DETAIL - PLAN VIEW (1/2)

STORMGATE MANHOLE DATA

STRUCTURE ID				SDG
WATER QUALITY FLOW RATE (cfs)				1.86 CFS
PEAK FLOW RATE, Qpeak (cfs)				16.35 CFS
MANHOLE DIAMETER (48", 60", 72")				72"
RIM ELEVATION				31.40'
PIPE DATA:	I.E.	ORIENTATION	MATERIAL	DIAMETER
INLET PIPE	26.95'	358°	CPSSP	18"
INLET PIPE	27.39'	96°	CMP	18"
WATER QUALITY FLOW OUTLET PIPE	26.50'	175°	CPSSP	18"
PEAK FLOW OUTLET PIPE	27.39'	278°	CMP	18"
ORIFICE TYPE (PIPE, CAP, PLATE)				PLATE
ORIFICE DIAMETER (in)				10"
WEIR CREST ELEVATION				28.01'
WEIR WALL ELEVATION				29.01'
HEAD OVER WEIR, H (ft)				1.02'
WSE at Qpeak				29.03'
WEIR ORIENTATION				PER PLAN
FLOOR ELEVATION				24.50'

NOTES/SPECIAL REQUIREMENTS:	PIPE ORIENTATION KEY:
1. CONTRACTOR TO CONFIRM ORIENTATION.	90° / 180° / 0° / 270°

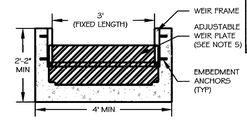

WEIR DETAIL - SECTION VIEW (B/2)

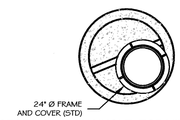

STORMGATE MANHOLE- TOP VIEW (2/2)

©2012 CONTECH Engineered Solutions, LLC

CONTECH ENGINEERED SOLUTIONS LLC

STORMGATE MANHOLE HIGH FLOW BYPASS
TOP VIEW, WEIR DETAIL, DATA AND NOTES
STANDARD DETAIL

DRAWING 2 / 10

DATE: 04/04/06 | SCALE: NONE | FILE NAME: SG-MH-DTL | DRAWN: MJW | CHECKED: ARG

NOTES:

1. PROVIDE POSITIVE SLOPE TO CATCH BASIN.
2. TACK FACE OF SAWCUT OR JOINT WITH AR 4000W OR EQUIVALENT.

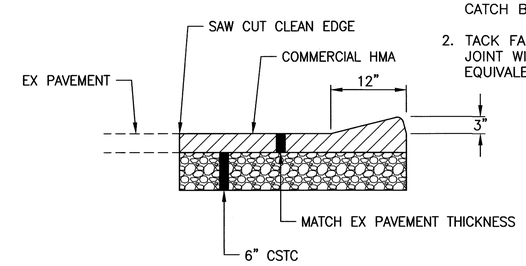

ASPHALT WEDGE CURB
DETAIL (3/10)
NO SCALE

NOTE:

A MINIMUM THICKNESS OF 1 FOOT REQUIRED OVER GEOMEMBRANE PRIOR TO OPERATING TRACKED VEHICLES IN POND AREAS.

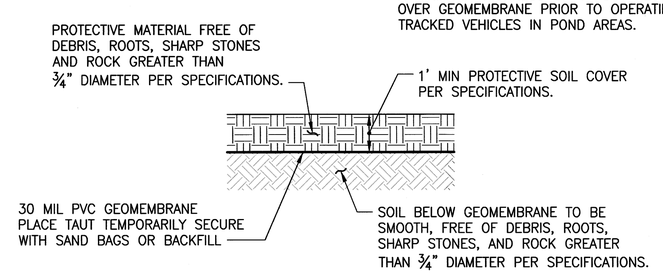

GEOMEMBRANE
DETAIL (4/TYP)
NO SCALE

72" FLOW SPLITTER
DETAIL (1/11)
NO SCALE

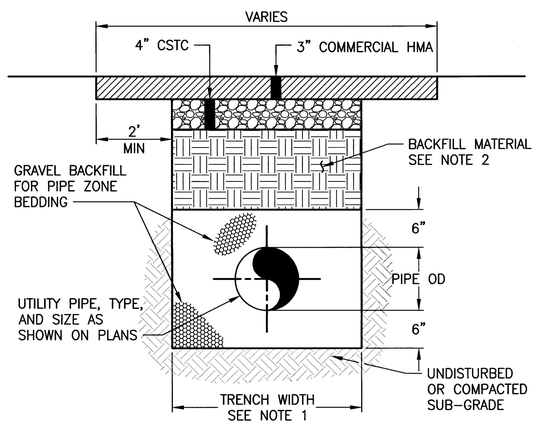

PIPE TRENCHING AND PAVEMENT REPAIR
DETAIL (2/4)
NO SCALE

NOTES:

1. SEE WSDOT STANDARD SPECIFICATIONS SECTION 2-09.4 FOR MEASUREMENT OF TRENCH WIDTH.
2. BACKFILL TRENCHES WITH SPECIAL BORROW OR SUITABLE NATIVE MATERIAL AS DIRECTED BY THE ENGINEER.
3. SEE WSDOT STANDARD SPECIFICATIONS SECTION 9-03.12(3) FOR GRAVEL BACKFILL FOR PIPE ZONE BEDDING.
4. COMPACT CSTC TO 95% OF MAXIMUM DENSITY.

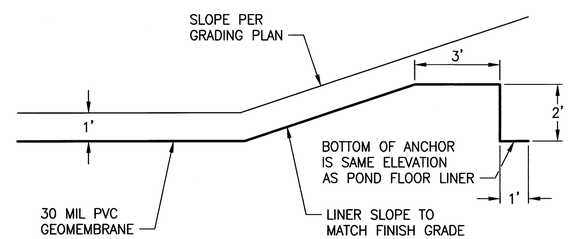

GEOMEMBRANE ANCHOR
DETAIL (5/8,9)
NO SCALE

Parametrix
4660 KITSAP WAY, SUITE A
BREMERTON, WASHINGTON 98312
T. 360.377.0014 F. 360.479.5961
www.parametrix.com

811 Know what's below. Call before you dig.

BID SET
FEBRUARY 29, 2016

CONTROL POINTS

REVISIONS

No.	BY	DATE	DESCRIPTION

SURVEYED: PMX
DESIGNED: JN
DRAWN: JC
CHECKED: DD
CRP No.
DATE: 02/29/16

JESSE L. NEILSON — STATE OF WASHINGTON — 50736 — REGISTERED PROFESSIONAL ENGINEER — 3/2/16

KITSAP COUNTY
DEPT. OF PUBLIC WORKS
614 DIVISION STREET MS-26
PORT ORCHARD, WA 98366
TEL:(360) 337-5777 FAX:(360) 337-4867

DUWE'IQ STORMWATER TREATMENT WETLAND

DRAINAGE DETAILS

KITSAP COUNTY, WASHINGTON
SECTION 16, TOWNSHIP 25 NORTH, RANGE 1 EAST, W.M.

U:\PSO\PROJECTS\CLIENTS\578-KITSAP\C\123-578-35 DuwieSWTRtmtWETLAND\PSO\CADD\DWG\PSO\578135-C15-21-DT.dwg JASON CRAUER 100 PM 2/29/2016

3726ZPT 3725CPT Assembly

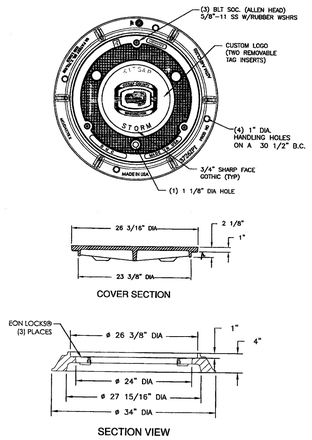

ej

Product Number
00372554B01
Design Features
-Materials
Frame
Gray Iron (CL35B)
Cover
Ductile Iron (80-55-06)

-Design Load
Heavy Duty
-Open Area
n/a
-Coating
Undipped
-√Designates Machined Surface

Certification
- ASTM A48
- ASTM A536
-
-Country of Origin:USA

Major Components
00372613
00372554

Drawing Revision
2/12/2013 Designer: DJH
5/15/2013 Revised By: DJH

Disclaimer
Weights (lbs./kg) dimensions (inches/mm) and Drawings provided for your guidance. We reserve the right to modify specifications without prior notice.

CONFIDENTIAL: This drawing is the property of EJ GROUP, Inc., and embodies confidential information, registered marks, patents, trade secret information. Copyright © 2012 EJ GROUP, Inc. All rights reserved.

Contact
800 626 4653
ejco.com

KITSAP COUNTY TYPE 2 CB FRAME AND GRATE
DETAIL 1 TYP
NO SCALE

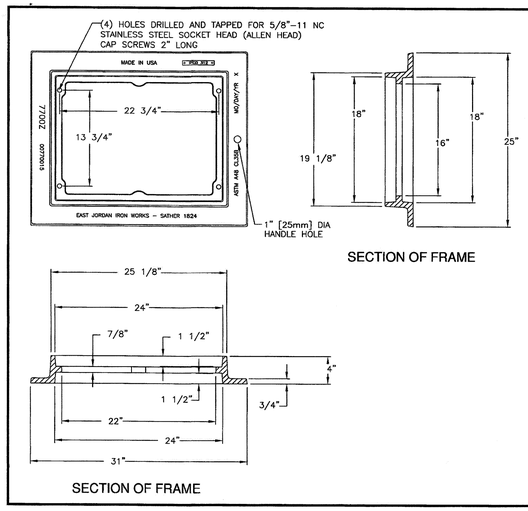

EAST JORDAN IRON WORKS, INC.
P.O. BOX 439
EAST JORDAN, MI. 49727
1-800-874-4100
FAX 231-536-4458

DRAWN	DATE
SBB	07/22/11
APPROVED	DATE

REVERSIBLE 7700Z FRAME
DIAGONAL BOLTING

PRODUCT NO.
00770015

CATALOG NO.
7700Z

REF. PRODUCT DRAWING
00770015

EST. WT.
FRAME: 133 LBS 60kg

OPEN AREA
N/A

MAT'L SPEC.
FRAME – GRAY IRON
ASTM A48 CL35B

LOAD RATING
HEAVY DUTY

KITSAP COUNTY TYPE 1 CB FRAME
DETAIL 2 TYP
NO SCALE

7700M3 Grate

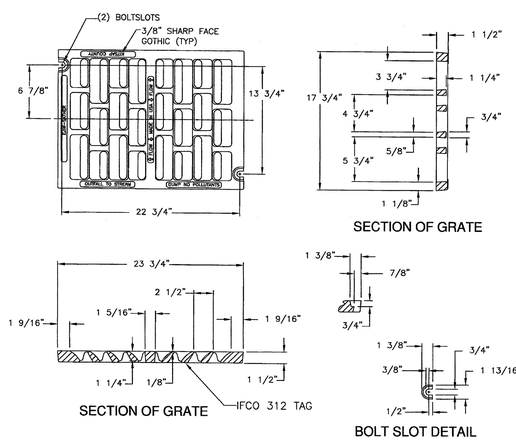

ej

Product Number
007700004
Design Features
-Materials
Ductile Iron (80-55-06)
-Design Load
Heavy Duty
-Open Area
100 sq in
-Coating
Undipped
-√Designates Machined Surface

Certification
- ASTM A536
-
-
-Country of Origin:USA

Drawing Revision
5/15/2013 Designer: DAE
5/17/2013 Revised By: MAH

Disclaimer
Weights (lbs./kg) dimensions (inches/mm) and Drawings provided for your guidance. We reserve the right to modify specifications without prior notice.

CONFIDENTIAL: This drawing is the property of EJ GROUP, Inc., and embodies confidential information, registered marks, patents, trade secret information. Copyright © 2012 EJ GROUP, Inc. All rights reserved.

Contact
800 626 4653
ejco.com

KITSAP COUNTY TYPE 1 CB GRATE
DETAIL 3 TYP
NO SCALE

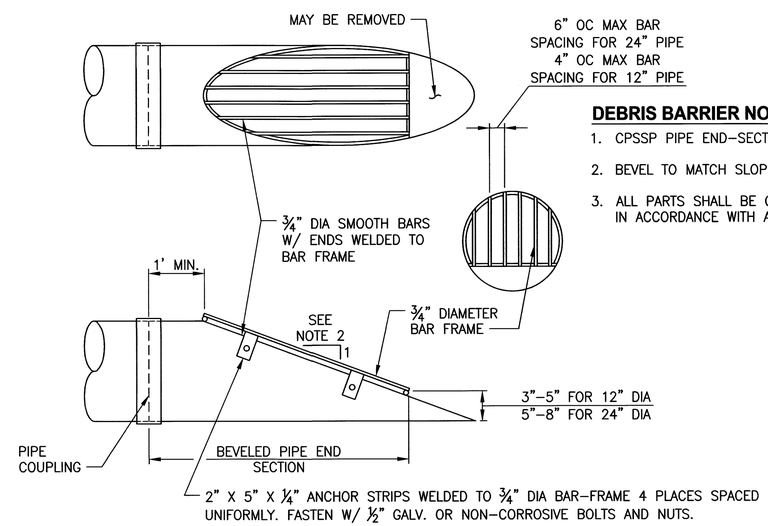

DEBRIS BARRIER NOTES:

1. CPSSP PIPE END-SECTION SHOWN.
2. BEVEL TO MATCH SLOPE OF BANK.
3. ALL PARTS SHALL BE GALVANIZED STEEL IN ACCORDANCE WITH AASHTO M111.

DEBRIS BARRIER
DETAIL 4 11,12
NO SCALE

BID SET
FEBRUARY 29, 2016

Parametrix
4660 KITSAP WAY, SUITE A
BREMERTON, WASHINGTON 98312
T. 360.377.0014 F. 360.479.5961
www.parametrix.com

811 Know what's below. Call before you dig.

CONTROL POINTS	REVISIONS			
	No.	BY	DATE	DESCRIPTION

SURVEYED: PMX
DESIGNED: JN
DRAWN: JC
CHECKED: DD
CRP No.
DATE: 02/29/16

JESSE L. NEILSON STATE OF WASHINGTON 50736 REGISTERED PROFESSIONAL ENGINEER 2/29/16

KITSAP COUNTY 1857 WASHINGTON
KITSAP COUNTY
DEPT. OF PUBLIC WORKS
614 DIVISION STREET MS-26
PORT ORCHARD, WA 98366
TEL:(360) 337-5777 FAX:(360) 337-4867

DUWE'IQ STORMWATER TREATMENT WETLAND

DRAINAGE DETAILS

KITSAP COUNTY, WASHINGTON
SECTION 16, TOWNSHIP 25 NORTH, RANGE 1 EAST, W.M.

SHEET *16* OF *21*

U:\PSD\PROJECTS\CLIENTS\1578-KITSAP Co\233-1578-135 DUWE'IQ\STRTHETWETLAND\PSD\DWG\PSD\1578135-C15-21-DT.dwg JASON, CERALDE 100 PM 2/29/2016

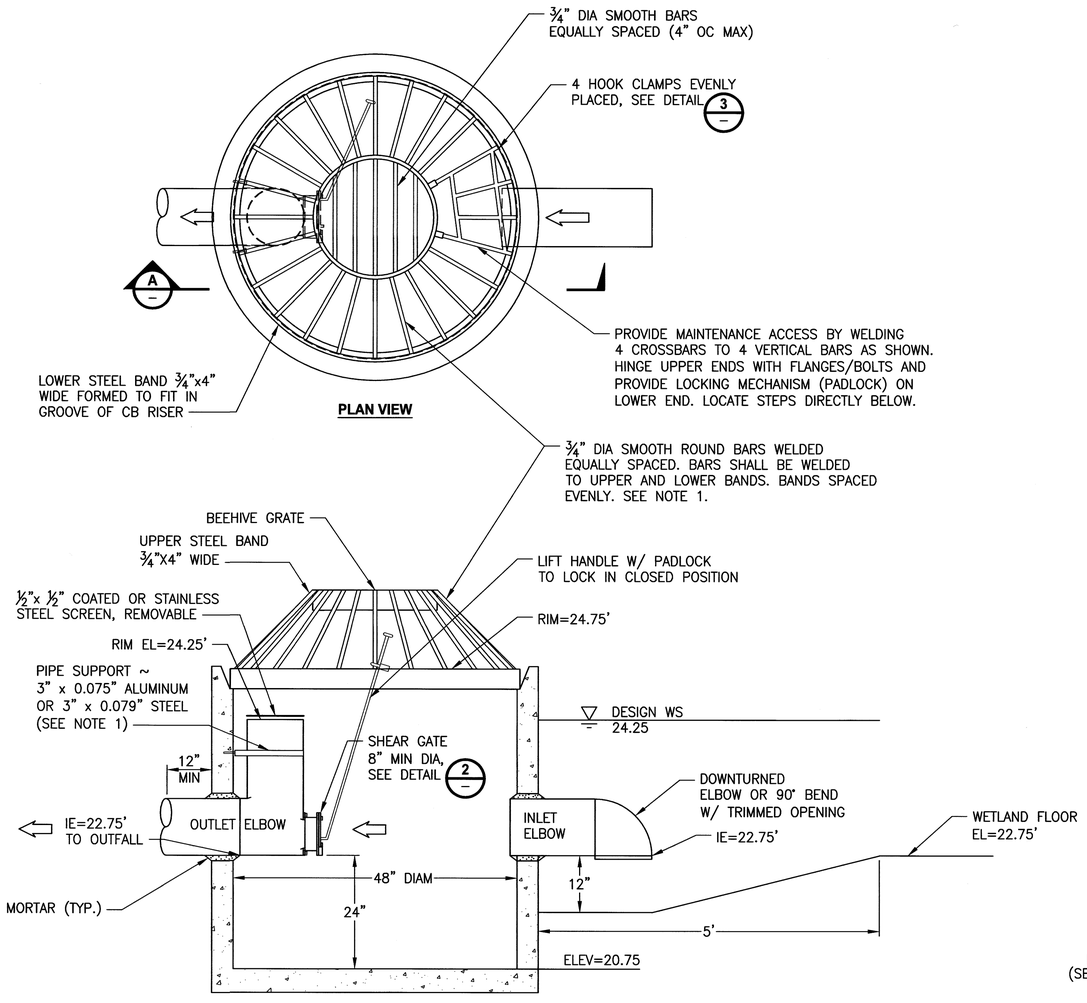

SECTION A

TYPE 2 CB EMERGENCY OVERFLOW DETAIL 1 / 9,10

NO SCALE

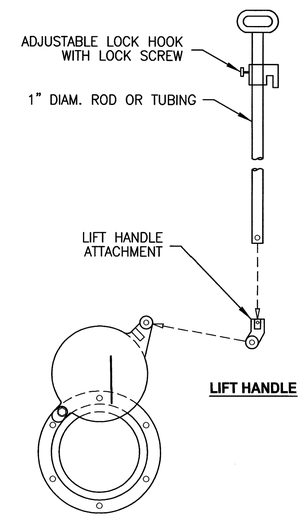

LIFT HANDLE

MAXIMUM OPENING

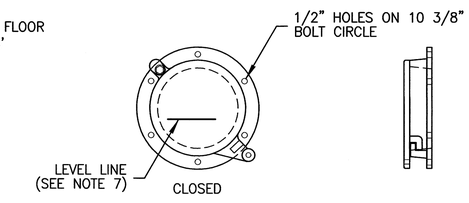

FRONT

SIDE

SHEAR GATE DETAIL 2 / –,10

NO SCALE

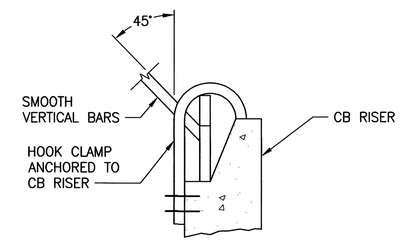

HOOK CLAMP DETAIL 3 / –

NO SCALE

GENERAL NOTES

1. THE PIPE SUPPORTS AND THE OUTLET TEE SHALL BE CONSTRUCTED OF THE SAME MATERIAL AND BE ANCHORED AT A MAXIMUM SPACING OF 36". ATTACH THE PIPE SUPPORTS TO THE MANHOLE WITH 5/8" STAINLESS STEEL EXPANSION BOLTS OR EMBED THE SUPPORTS INTO THE MANHOLE WALL 2".
2. THE VERTICAL RISER STEM OF THE OUTLET TEE SHALL BE THE SAME DIAMETER AS THE HORIZONTAL OUTLET PIPE.
3. FINISHED LOCKED HANDLE ABOVE 26.0' WITH GATE CLOSED.
4. THE SHEAR GATE SHALL BE MADE OF ALUMINUM ALLOY IN ACCORDANCE WITH ASTM B 26 AND ASTM B 275, DESIGNATION ZG32A; OR CAST IRON IN ACCORDANCE WITH ASTM A 48, CLASS 30B.
5. THE LIFT HANDLE SHALL BE MADE OF A SIMILAR METAL TO THE GATE (TO PREVENT GALVANIC CORROSION), IT MAY BE OF SOLID ROD OR HOLLOW TUBING, WITH ADJUSTABLE HOOK AS REQUIRED.
6. A NEOPRENE RUBBER GASKET IS REQUIRED BETWEEN THE RISER MOUNTING FLANGE AND THE GATE FLANGE.
7. INSTALL THE GATE SO THAT THE LEVEL–LINE MARK IS LEVEL WHEN THE GATE IS CLOSED.
8. THE MATING SURFACES OF THE LID AND THE BODY SHALL BE MACHINED FOR PROPER FIT.
9. ALL SHEAR GATE BOLTS SHALL BE STAINLESS STEEL.
10. THE SHEAR GATE MAXIMUM OPENING SHALL BE CONTROLLED BY LIMITED HINGE MOVEMENT, A STOP TAB, OR OTHER DEVICE.
11. BEEHIVE GRATE SHALL BE CONSTRUCTED OF HOT DIPPED GALVANIZED STEEL. NO FIELD WELDING SHALL BE ALLOWED.

Parametrix
4660 KITSAP WAY, SUITE A
BREMERTON, WASHINGTON 98312
T. 360.377.0014 F. 360.479.5961
www.parametrix.com

811 Know what's below. Call before you dig.

BID SET
FEBRUARY 29, 2016

CONTROL POINTS	REVISIONS				
	No.	BY	DATE	DESCRIPTION	

SURVEYED: PMX
DESIGNED: JN
DRAWN: JC
CHECKED: DD
CRP No.
DATE: 02/29/16

JESSE L. NEILSON — STATE OF WASHINGTON — 50736 — REGISTERED PROFESSIONAL ENGINEER — 3/8/16

KITSAP COUNTY 1857 WASHINGTON
KITSAP COUNTY
DEPT. OF PUBLIC WORKS
614 DIVISION STREET MS–26
PORT ORCHARD, WA 98366
TEL:(360) 337–5777 FAX:(360) 337–4867

DUWE'IQ STORMWATER TREATMENT WETLAND

OUTLET CONTROL STRUCTURE DETAILS

KITSAP COUNTY, WASHINGTON
SECTION 16, TOWNSHIP 25 NORTH, RANGE 1 EAST, W.M.

U:\PSO\PROJECTS\CLIENTS\378-KITSAP\C1235-15-78-SS DUWE\DWTR\WETLAND\PSO\C1\CADD\DWG\PSO15783S-C15-2-07.DWG JASON GERALDE 100.PM 2/29/2016

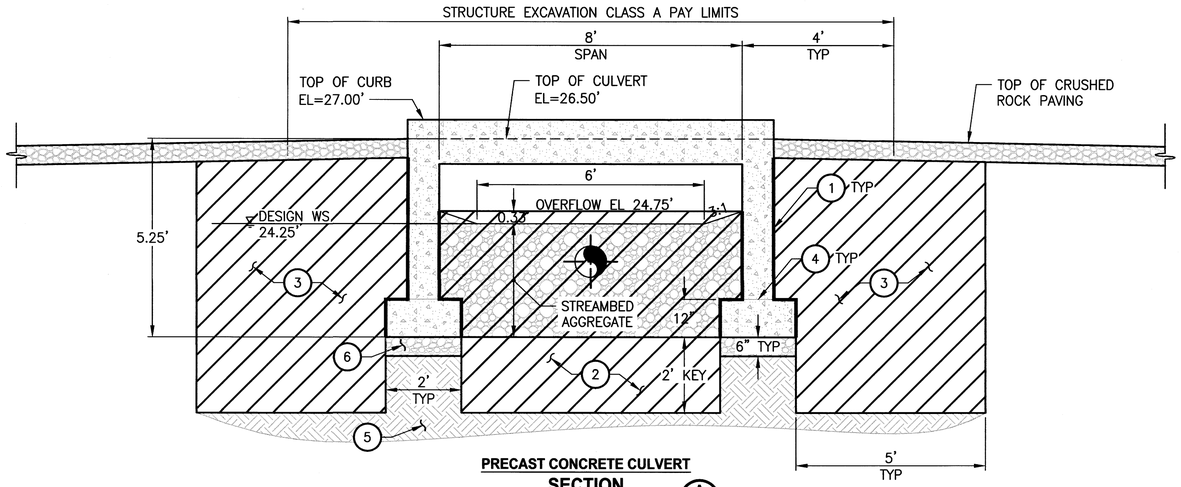

PRECAST CONCRETE CULVERT
SECTION A/12
NO SCALE

PRECAST CONCRETE CULVERT KEY NOTES:

1. WATERPROOF CONSTRUCTION JOINTS WITH 2 BEADS OF 1/4" THICK HYDROPHYLLIC CAULK, OR APPROVED EQUAL, TYP.
2. 24" THICK CLASS 3000 CEMENT CONCRETE WEIR WALL, POUR AROUND STORM PIPE.
3. 24" THICK CLASS 3000 CEMENT CONCRETE CUT OFF WALL.
4. GROUT JOINTS BETWEEN CULVERT WALLS AND FOOTINGS.
5. UNDISTURBED NATIVE SOIL SUBGRADE, TYP TAMP PRIOR TO PLACING PRECAST FOOTINGS.
6. CSTC COMPACTED TO 95% MAXIMUM DENSITY.

PRECAST CONCRETE CULVERT NOTES:

1. POUR CONCRETE WEIR KEY AND CUT OFF WALLS AGAINST UNDISTURBED NATIVE SOIL.
2. CONCRETE REINFORCING FOR CULVERT PER MANUFACTURER'S SPECIFICATIONS.

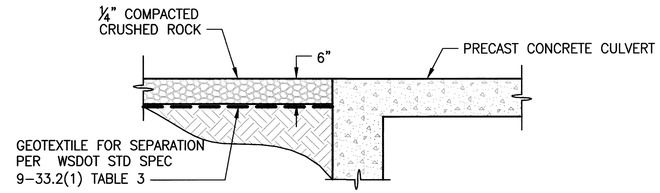

CRUSHED ROCK PAVING WITH GEOTEXTILE
DETAIL 1/12
NO SCALE

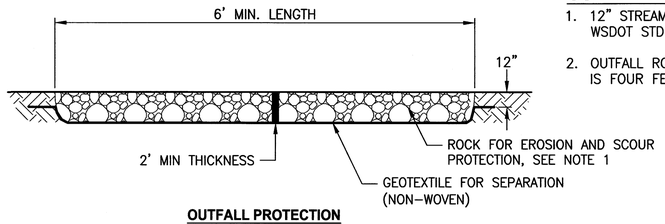

OUTFALL PROTECTION NOTES:

1. 12" STREAMBED COBBLES PER WSDOT STD SPEC 9-03.11(2).
2. OUTFALL ROCK PROTECTION WIDTH IS FOUR FEET MIN.

OUTFALL PROTECTION
DETAIL 2/11
NO SCALE

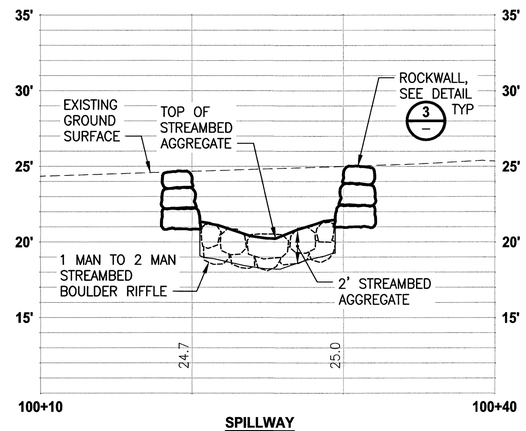

SPILLWAY
SECTION B/12
1"=5'

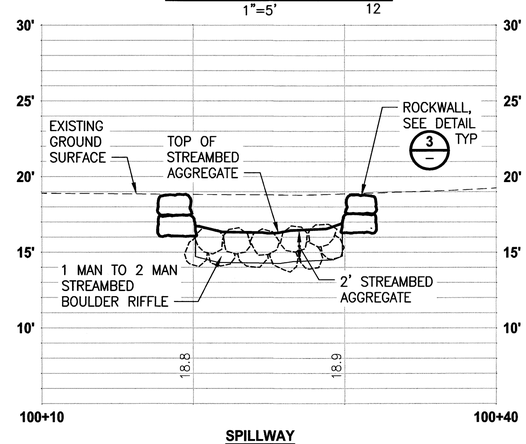

SPILLWAY
SECTION C/12
1"=5'

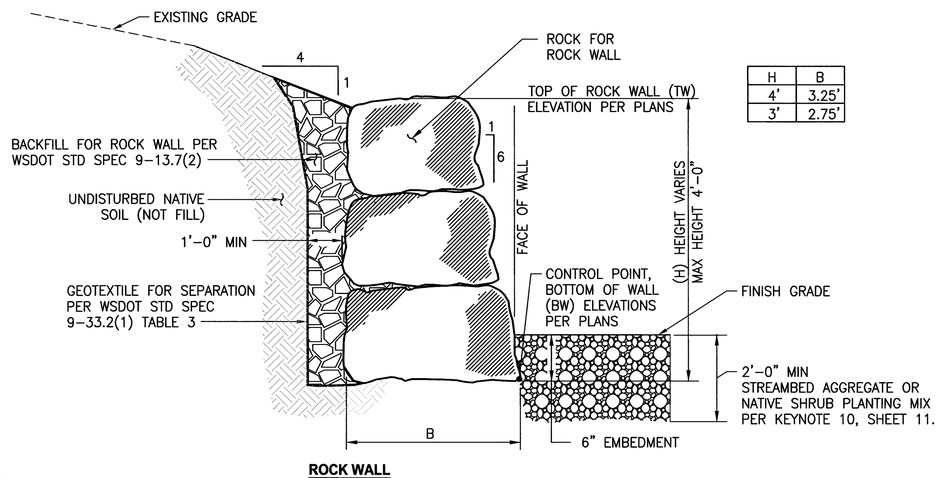

H	B
4'	3.25'
3'	2.75'

ROCK WALL
DETAIL 3/12
NO SCALE

Parametrix
4660 KITSAP WAY, SUITE A
BREMERTON, WASHINGTON 98312
T. 360.377.0014 F. 360.479.5961
www.parametrix.com

811 Know what's below. Call before you dig.

BID SET
FEBRUARY 29, 2016

CONTROL POINTS	REVISIONS			
	No.	BY	DATE	DESCRIPTION

SURVEYED: PMX
DESIGNED: JN
DRAWN: JC
CHECKED: DD
CRP No.
DATE: 02/29/16

JESSE L. NEILSON — STATE OF WASHINGTON — 50736 — REGISTERED PROFESSIONAL ENGINEER — 2/29/16

KITSAP COUNTY — 1857 — WASHINGTON
KITSAP COUNTY
DEPT. OF PUBLIC WORKS
614 DIVISION STREET MS-26
PORT ORCHARD, WA 98366
TEL:(360) 337-5777 FAX:(360) 337-4867

DUWE'IQ STORMWATER TREATMENT WETLAND

CULVERT AND SPILLWAY DETAILS AND SECTIONS

KITSAP COUNTY, WASHINGTON
SECTION 16, TOWNSHIP 25 NORTH, RANGE 1 EAST, W.M.

U:\PROJ\Projects\Clients\578-KitsapCo\233-5798-155 Duwe'qs\Trimble\WETLAND\PROJECT\CADD\DWG\PROJ578135-C15-21-07.dwg JASON EBERLIE 1:00 PM 2/29/2016

LOG WEIR SCHEDULE:

WEIR #	CONCRETE ANCHOR BLOCK		
	L	W	H
1	6'	2'	2'
2	6'	2'	2'
3	6'	2'	2'
4	6'	2'	2'
5	6'	2.75'	1.5'

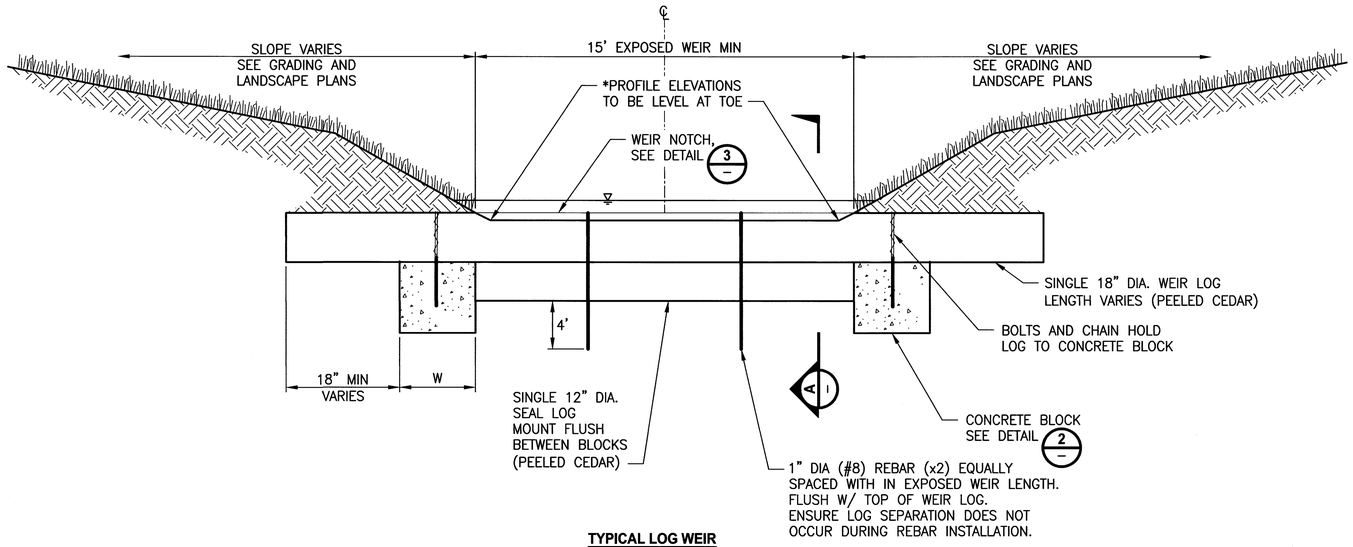

TYPICAL LOG WEIR
DETAIL 1/TYP
NO SCALE

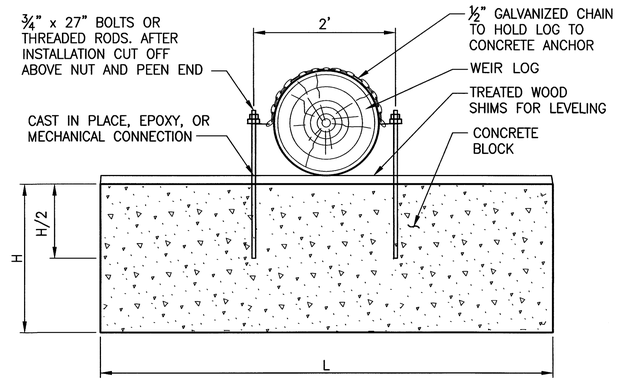

LOG WEIR ANCHOR
DETAIL 2/–
NO SCALE

LOG ANCHOR NOTES:

1. CONCRETE CLASS 3000.
2. ANCHOR BOLTS OR ROD – ASTM GALVANIZED PER AASHTO M–232.
3. ANCHOR NUTS AND WASHERS – GALVANIZED – ASTM A563 GRADE A (DOUBLE NUT AT ALL LOCATIONS).
4. MIN 1' COVER OVER CONCRETE BLOCK (SEE GRADING).
5. AFTER SETTING LOGS, PROTECT FROM CONSTRUCTION TRAFFIC TO MAINTAIN LEVEL.
6. VERIFY LOG WEIR IS LEVEL AFTER BACKFILL AND GRADING.
7. CONNECTION SURFACE BETWEEN WEIR LOG AND SEAL LOG SHALL BE PLANED TO CREATE SEAL BETWEEN LOGS. MAX OPENING SHALL BE LESS THAN ¼".

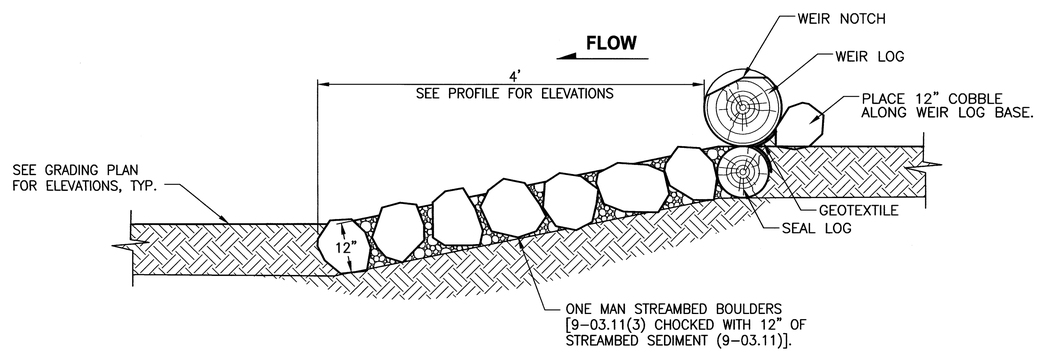

TYPICAL LOG WEIR
SECTION A/–
NO SCALE

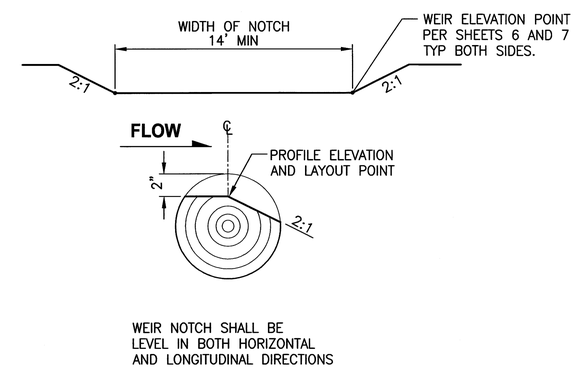

WEIR NOTCH
DETAIL 3/–,9
NO SCALE

Parametrix
4660 KITSAP WAY, SUITE A
BREMERTON, WASHINGTON 98312
T. 360.377.0014 F. 360.479.5961
www.parametrix.com

811 Know what's **below.** **Call** before you dig.

BID SET
FEBRUARY 29, 2016

CONTROL POINTS

REVISIONS

No.	BY	DATE	DESCRIPTION

SURVEYED: PMX
DESIGNED: JN
DRAWN: JC
CHECKED: DD
CRP No.
DATE: 02/29/16

JESSE L. NEILSON — STATE OF WASHINGTON — 50736 — REGISTERED PROFESSIONAL ENGINEER — 3/29/16

KITSAP COUNTY
DEPT. OF PUBLIC WORKS
614 DIVISION STREET MS–26
PORT ORCHARD, WA 98366
TEL:(360) 337–5777 FAX:(360) 337–4867

DUWE'IQ STORMWATER TREATMENT WETLAND

LOG WEIR DETAILS

KITSAP COUNTY, WASHINGTON
SECTION 16, TOWNSHIP 25 NORTH, RANGE 1 EAST, W.M.

U:\PSO\PROJECTS\CLIENTS\578-KITSAP\0243-1578-35 DUWEIQSWTP\THWETLAND\PSN\CADD\DWG\PSO\1578135-C15-21-27.dwg JASON CERVALIE 1:00 PM 2/29/2016

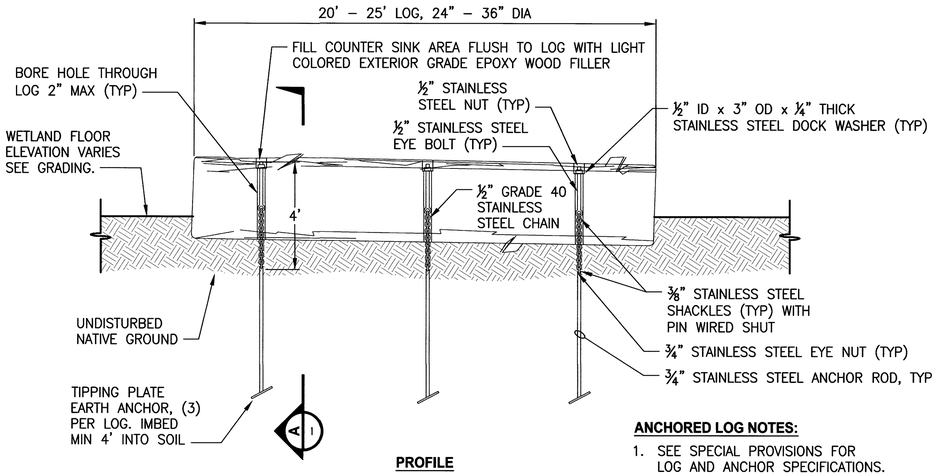

PROFILE

ANCHORED HABITAT LOG AND ROOT WAD

TYPICAL DETAIL 1 TYP

NO SCALE

ANCHORED LOG NOTES:

1. SEE SPECIAL PROVISIONS FOR LOG AND ANCHOR SPECIFICATIONS.
2. TIGHTEN NUTS TO TENSION CHAIN AND ELIMINATE LOG MOVEMENT.
3. BRANCHES AND ROOT WADS NOT SHOWN FOR CLARITY.

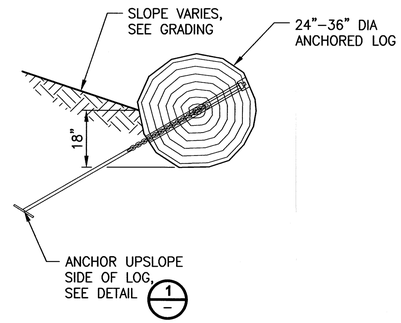

ANCHORED HABITAT LOG

TYPICAL SECTION A TYP

NO SCALE

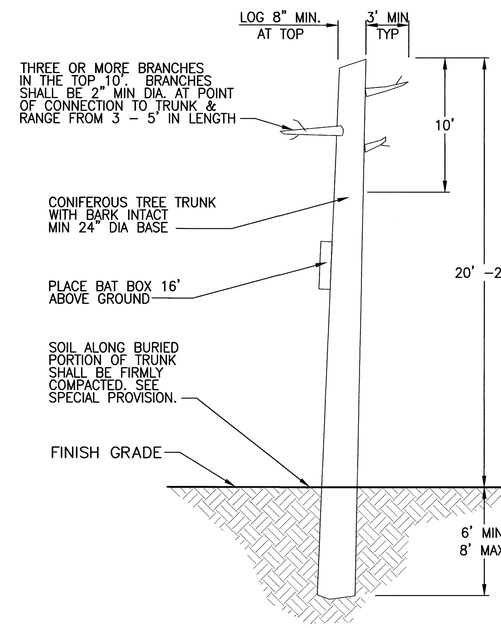

SNAG

TYPICAL DETAIL 4 TYP

NO SCALE

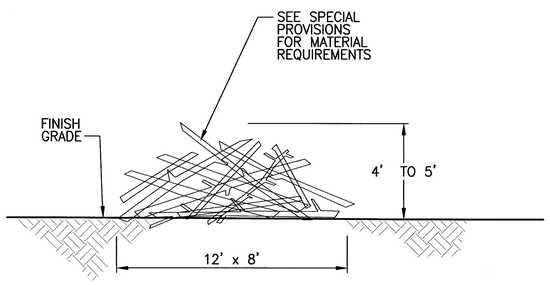

BRUSH PILE

TYPICAL DETAIL 2 TYP

NO SCALE

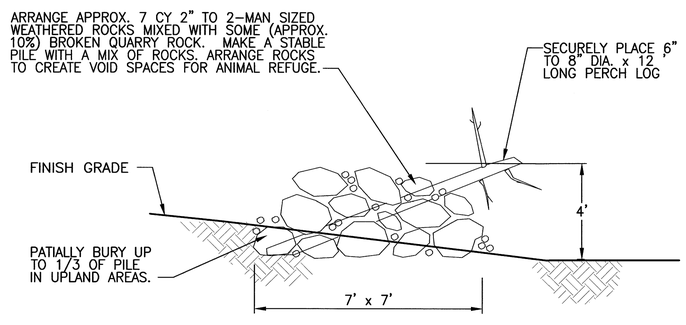

ROCK PILE

TYPICAL DETAIL 3 TYP

NO SCALE

Parametrix
4660 KITSAP WAY, SUITE A
BREMERTON, WASHINGTON 98312
T. 360.377.0014 F. 360.479.5961
www.parametrix.com

811 Know what's **below.** **Call** before you dig.

BID SET

FEBRUARY 29, 2016

CONTROL POINTS

REVISIONS

No.	BY	DATE	DESCRIPTION

SURVEYED:	PMX
DESIGNED:	JN
DRAWN:	JC
CHECKED:	DD
CRP No.	
DATE:	02/29/16

JESSE L. NEILSON, STATE OF WASHINGTON, 50736, REGISTERED PROFESSIONAL ENGINEER, 2/29/16

KITSAP COUNTY 1857 WASHINGTON

KITSAP COUNTY
DEPT. OF PUBLIC WORKS
614 DIVISION STREET MS–26
PORT ORCHARD, WA 98366
TEL:(360) 337–5777 FAX:(360) 337–4867

DUWE'IQ STORMWATER TREATMENT WETLAND

ANCHORED LOG & HABITAT STRUCTURE DETAILS

KITSAP COUNTY, WASHINGTON
SECTION 16, TOWNSHIP 25 NORTH, RANGE 1 EAST, W.M.

GENERAL NOTES

1. CONTRACTOR IS RESPONSIBLE FOR SUPPLY AND FABRICATION OF ALL METAL COMPONENTS OF GATES, EVEN COMPONENTS NOT LISTED.
2. ALL COMPONENTS SHALL BE HOT DIPPED GALVANIZED AFTER FABRICATION. NO FIELD WELDING SHALL BE ALLOWED.
3. A TOTAL OF TWO POSTS ARE REQUIRED FOR EACH GATE INSTALLATION, ONE FOR THE CLOSED POSITION AND ONE FOR THE OPEN POSITION (TYPICAL).

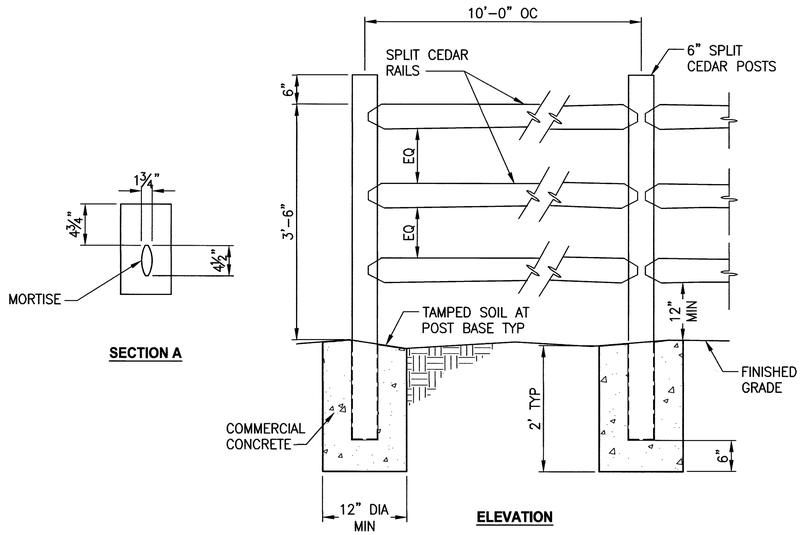

CEDAR SPLIT 3-RAIL FENCE INSTALLATION ON GROUND

TYPICAL DETAIL (1 TYP)

NO SCALE

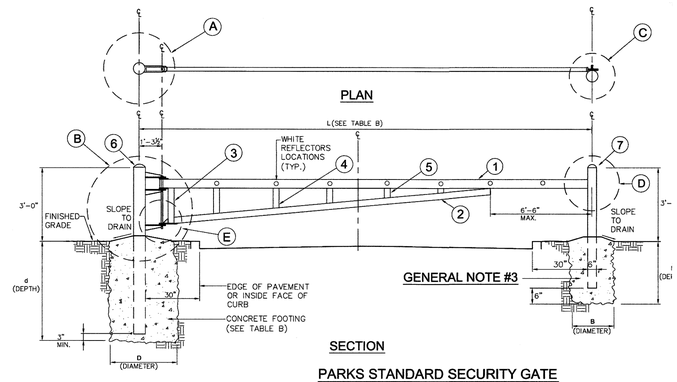

PARKS STANDARD SECURITY GATE

N.T.S.

TABLE A

DETAIL MARK	QTY.	DESCRIPTION	DIMENSIONS
1	2	REC. STL. TUBE	TS 6 X 2 X 1/4 , A500
2	2	"	TS 4 X 2 X 3/16 , A500
3	1	"	"
4	1	"	"
5	1	"	"
6	2	STEEL TUBE	8" O.D., STD., A53
7	2	"	6" O.D., STD., A36
8	6	PLATE STEEL	3/4" X 5" X 1'-1" , A36
9	6	"	1/2" X 3" X 10" , A36
10	6	"	1/2" x 3" x 3-1/2", A36
11	2	"	1/2" X 3" X 3"
12	4	"	1/2" X 4" X 8" , A36
13	2	"	3/4" X 4" X 12", A36
14	2	BRG. PAD	1/2" X 4"
15	1	PLATE STEEL	1/2" X 6" X 8"
16	2	STEEL PIN	1" X 3'-0", A36

TABLE B

		L (FT.)														
		15'	16'	17'	18'	19'	20'	21'	22'	23'	24'	25'	26'	27'	28'	29'	30'
GRAVEL; OR, SANDY GRAVEL S=400	D	2.0'	2.0'	2.0'	2.0'	2.0'	2.25'	2.25'	2.25'	2.25'	2.25'	2.25'	2.5'	2.5'	2.5'	2.75'	2.75'
	d	3.25'	3.45'	3.6'	3.8'	4.0'	4.0'	4.35'	4.5'	4.7'	4.85'	5.0'	5.0'	5.1'	5.25'	5.25'	5.35'
	B	2.0'	—	—	—	—	—	—	—	—	—	—	—	—	—	—	►
	b	3.0'	—	—	—	—	—	—	—	—	—	—	—	—	—	—	►
SAND; SILTY SAND; CLAYEY SAND; SILTY GRAVEL; CLAYEY GRAVEL S=300	D	2.5'	2.5'	2.5'	2.5'	2.5'	2.5'	2.5'	2.5'	2.75'	3.0'	3.0'	3.0'	3.0'	3.0'	3.25'	3.5'
	d	3.35'	3.5'	3.7'	3.9'	4.05'	4.25'	4.7'	4.9'	5.0'	5.0'	5.0'	5.2'	5.35'	5.5'	5.5'	5.5'
	B	2.5'	—	—	—	—	—	—	—	—	—	—	—	—	—	—	►
	b	3.0'	—	—	—	—	—	—	—	—	—	—	—	—	—	—	►
CLAY; SANDY CLAY; SILTY CLAY; OR, CLAYEY SILT S=200	D	2.25'	2.25'	2.25'	2.25'	2.25'	2.25'	2.25'	2.5'	2.75'	3.0'	3.15'	3.35'	3.6'	3.85'	4.0'	
	d	4.15'	4.3'	4.55'	4.75'	5.0'	5.2'	5.75'	6.0'	6.0'	6.0'	6.0'	6.0'	6.0'	6.0'	6.0'	6.15'
	b	2.25'	—	—	—	—	—	—	—	—	—	—	—	—	—	—	►
	B	4.15'	—	—	—	—	—	—	—	—	—	—	—	—	—	—	►

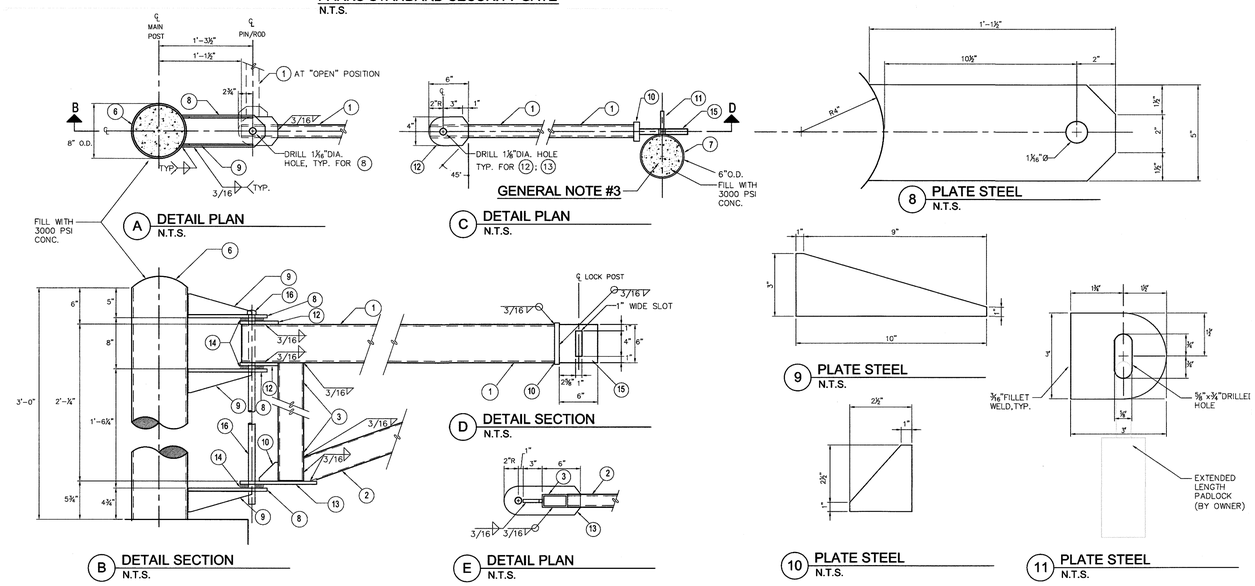

NOTES

1. MATERIAL FOR METAL SAFETY RAILING SHALL BE HOT DIPPED GALV STEEL (ASTM A120).
2. MAXIMUM 4 INCH CLEAR SPACE BETWEEN BALUSTERS.

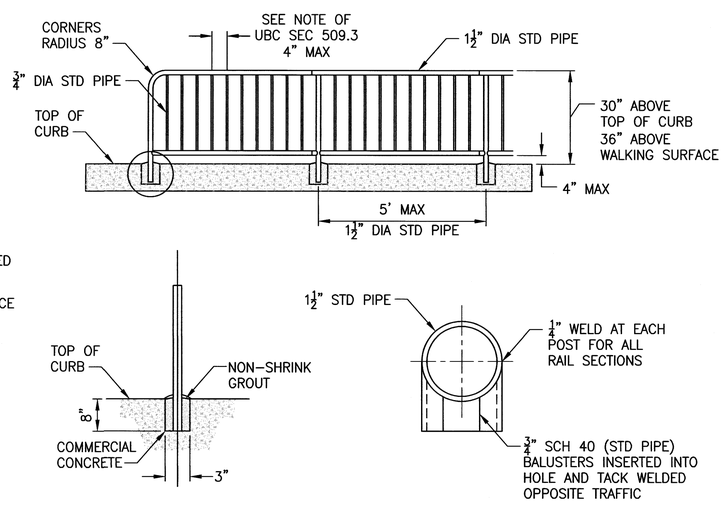

METAL SAFETY RAILING

TYPICAL DETAIL (3 TYP)

NO SCALE

SECURITY GATE

TYPICAL DETAIL (2 TYP)

NO SCALE

Parametrix
4660 KITSAP WAY, SUITE A
BREMERTON, WASHINGTON 98312
T. 360.377.0014 F. 360.479.5961
www.parametrix.com

811 Know what's below. Call before you dig.

BID SET

FEBRUARY 29, 2016

CONTROL POINTS	REVISIONS			
	No.	BY	DATE	DESCRIPTION

SURVEYED: PMX
DESIGNED: JN
DRAWN: JC
CHECKED: DD
CRP No.
DATE: 02/29/16

JESSE L. NEILSON — STATE OF WASHINGTON — 50736 — REGISTERED PROFESSIONAL ENGINEER — 2/25/16

KITSAP COUNTY — 1857 — WASHINGTON
KITSAP COUNTY
DEPT. OF PUBLIC WORKS
614 DIVISION STREET MS-26
PORT ORCHARD, WA 98366
TEL:(360) 337-5777 FAX:(360) 337-4867

DUWE'IQ STORMWATER TREATMENT WETLAND

FENCE AND GATE DETAILS

KITSAP COUNTY, WASHINGTON
SECTION 16, TOWNSHIP 25 NORTH, RANGE 1 EAST, W.M.

SHEET 21 OF 21

U:\PROJ\PROJECTS\CLIENTS\578-KITSAP\CY233-578-135 DUWE'QIW TRTMNT WETLAND\PRJ\cy\CADD\DWG\PSD\578135-C15-2-DT.dwg JASON GERLACE (0) PM 2/29/2016